ANNEX D.01 – DEMOLITION SCOPE

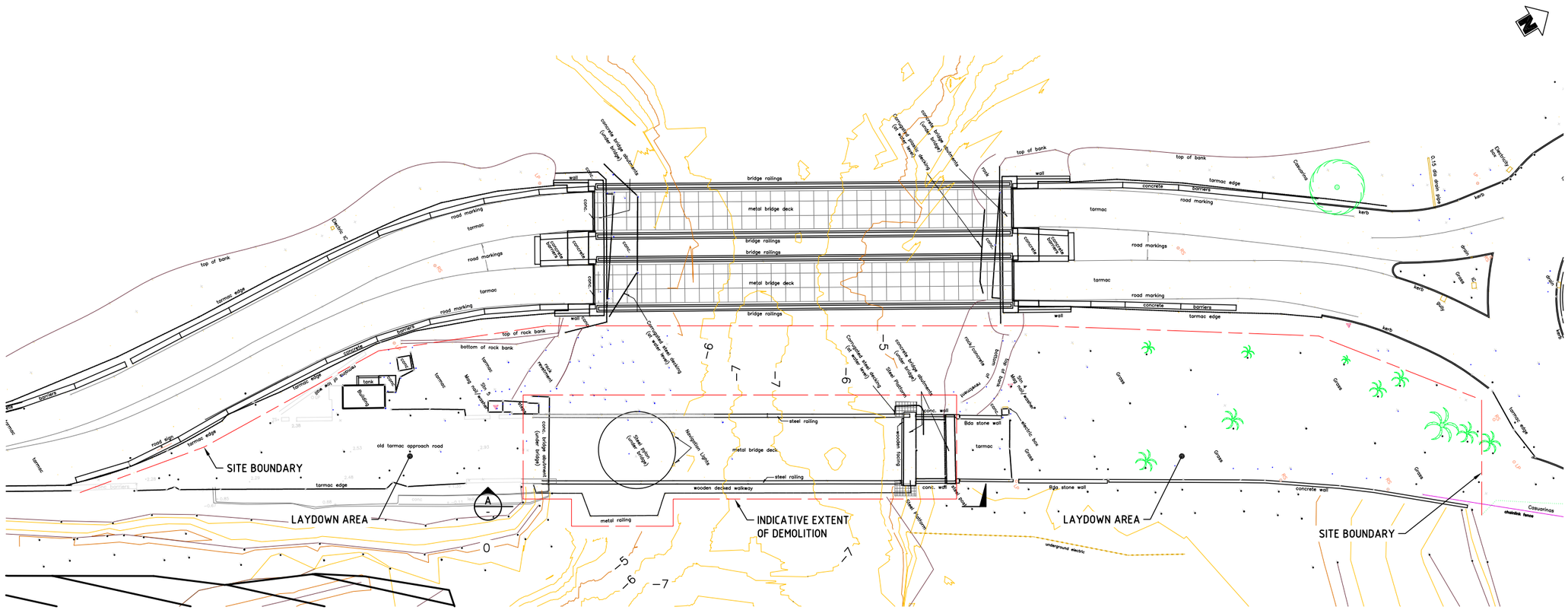

LONGBIRD BRIDGE DEMOLITION
EXTENT - PLAN
1:250

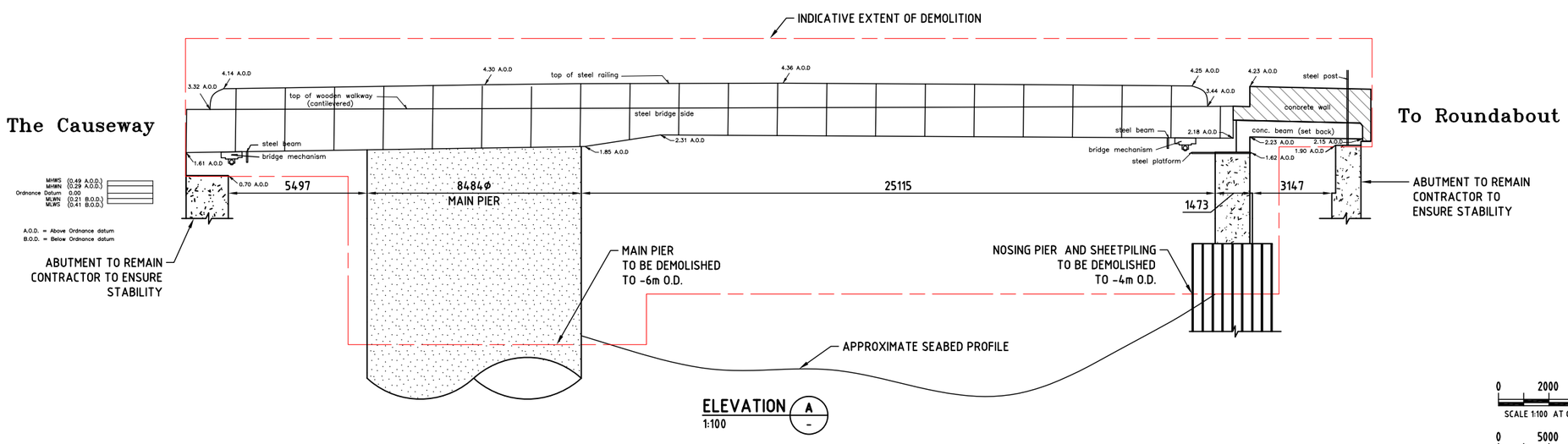

ELEVATION A
1:100

0 2000 4000 6000 8000 10000mm
SCALE 1:100 AT ORIGINAL SIZE

0 5000 10000 15000 20000 25000mm
SCALE 1:250 AT ORIGINAL SIZE

THE MINISTRY OF PUBLIC WORKS
P.O. Box HM525
Hamilton HMCX Bermuda
Phone: (441) 295-5151

DEPARTMENT OF WORKS AND ENGINEERING
Fax: (441) 295-5658

GENERAL NOTES:
1. SURVEY GRID IS BNG2000
2. LEVELS ARE IN METERS ABOVE ORDINANCE DATUM
3. SOME TOPOGRAPHIC DETAIL HAS BEEN ADOPTED FROM DWG. No. 5439/005/01
4. CONTRACTOR TO ENSURE STABILITY OF THE STRUCTURE DURING ALL PHASES OF DEMOLITION

ISSUED FOR: TENDER

AMENDMENTS:

NO:	REVISION	DATE:
A	FOR TENDER	17/05/19

SCALE: AS SHOWN AT ANSI D

SURVEY
PREPARED: JH,CD,SM DATE: 08/10/2007

DESIGN
PREPARED: – DATE: –
CHECKED: – DATE: –

DRAWING
PREPARED: A.KENNY DATE: 17/05/2019
CHECKED: – DATE: –

APPROVED BY: A.KENNY

PROJECT NUMBER: 44-21-76

PROJECT NAME:
LONGBIRD BRIDGE DEMOLOTION

THE CAUSEWAY
ST. GEORGE'S

SHEET TITLE:
DEMOLITION SCOPE

SHEET NUMBER: S101
REVISION: A

ANNEX D.02 – FEATURE SURVEY

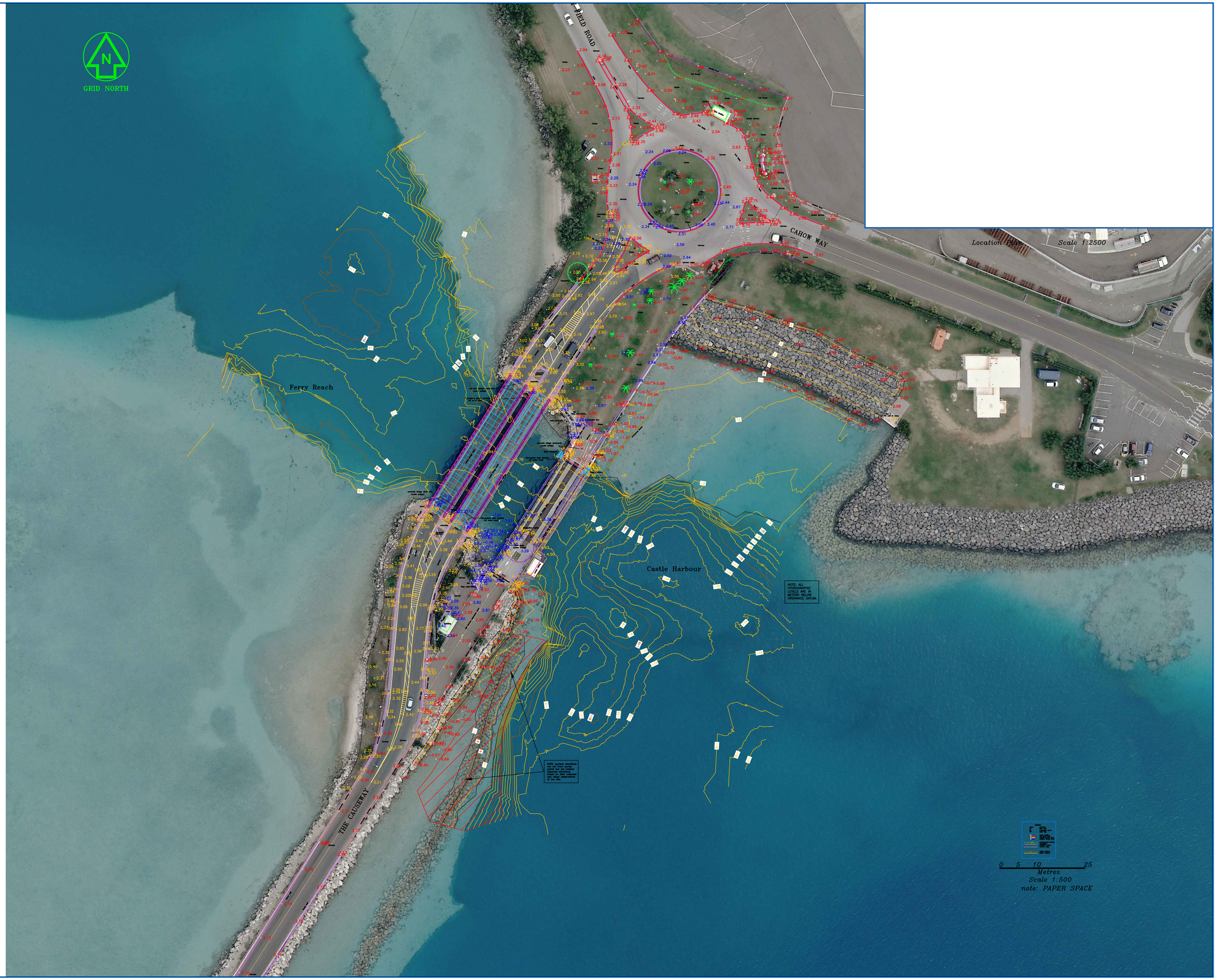

GOVERNMENT OF BERMUDA

Ministry of Public Works

Department of Land Surveys & Registration

P.O. Box HM1364 Hamilton HMFX Bermuda
Phone: (441) 295-5151 Fax: (441) 295-5658

GENERAL NOTES:

1. SURVEY GRID IS BNG2000.
2. LEVELS ARE IN METRES ABOVE ORDNANCE DATUM.

SURVEY STATION COORDINATES

STN	EASTINGS	NORTHINGS	LEVEL
3	554181.26	139824.08	2.51
4/1000	554166.79	139789.07	2.79
5	554138.23	139740.01	2.73
6	554201.51	139851.25	2.68
7/1002	554258.88	139788.35	2.07

THIS PLAN MUST NOT BE ALTERED IN ANY WAY UNLESS AUTHORISED BY THE REGISTERED LAND SURVEYOR

ONLY AUTHENTICATED COPIES OF THIS PLAN SHOULD BE USED
© COPYRIGHT – BERMUDA GOVERNMENT

ISSUED FOR:

AMENDMENTS:

NO:	REVISION	APP	DATE:
1	coastline topo detail	SP	28/1/19

SCALE: 1:500

SURVEY
PREPARED BY: CD — DATE: 20/9/17

DESIGN
PREPARED BY: — DATE:
CHECKED BY: — DATE:

DRAWING
PREPARED BY: CD — DATE: 21/9/17
CHECKED BY: SP — DATE: 22/9/17

APPROVED BY:
S. PATTERSON – SENIOR LAND SURVEYOR

PROJECT NUMBER:
30/251/23 TN84720

PROJECT NAME:

NEW LONGBIRD BRIDGE PROJECT

LONGBIRD BRIDGE
CAUSEWAY
ST.GEORGES

DRAWING FILE NO: CIVIL 3D 2018
PIMS\SURVEYPROJECTS\3025123\551002541

SHEET TITLE:

TOPOGRAPHIC SURVEY

SHEET NUMBER: 5510/025/41

REVISION: 1

ANNEX D.03 – 1953 US NAVY LONGBIRD DRAWINGS

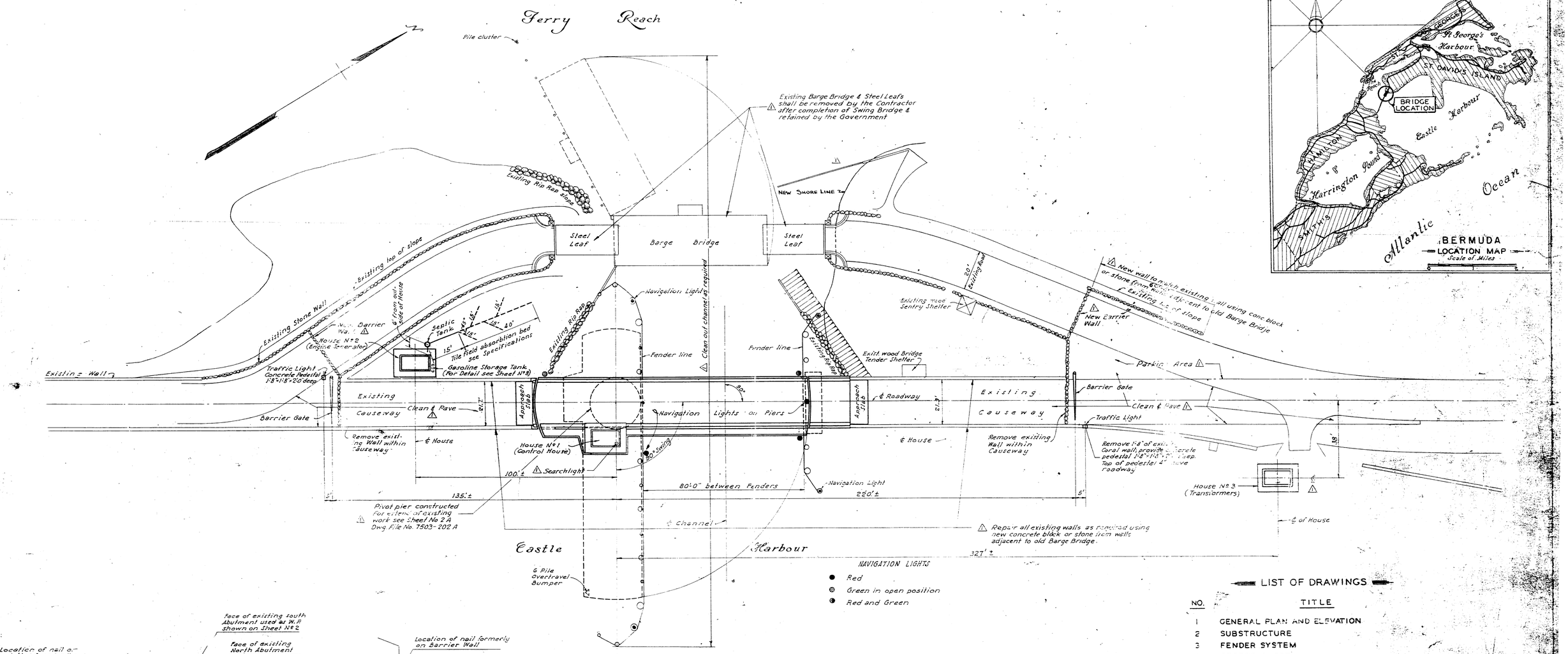

PLAN

NAVIGATION LIGHTS

- Red
- Green in open position
- Red and Green

NOTE: For soundings at bridge see reference Drawing No. 3184-7 Sheet No. 1

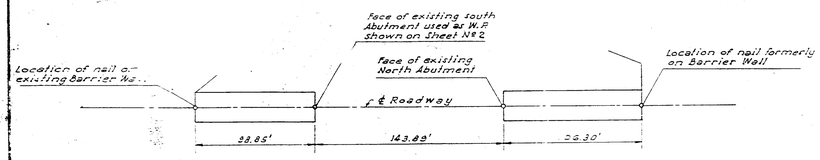

FIELD SURVEY LOCATION

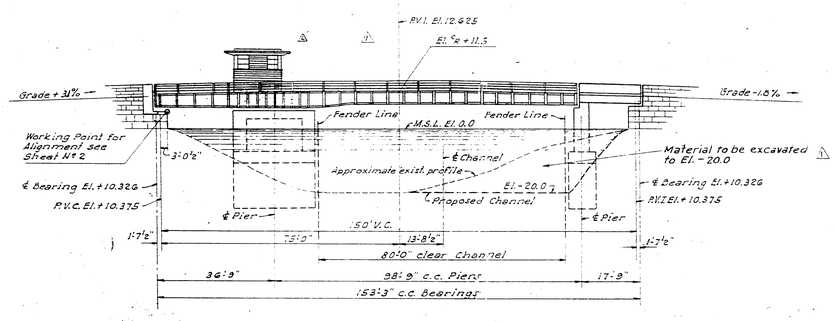

ELEVATION

LIST OF DRAWINGS

NO.	TITLE
1	GENERAL PLAN AND ELEVATION
2	SUBSTRUCTURE
3	FENDER SYSTEM
4	STRESS SHEET
5	GIRDERS
6	CROSS SECTIONS AND CONCRETE APPROACH SPAN
7	FRAMING PLAN
8	STRUCTURAL DETAILS
9	OPERATING MACHINERY - MAIN DRIVE
10	OPERATING MACHINERY - WEDGE END LIFTS
11	ARCHITECTURAL DETAILS OF HOUSES
12	WIRING DIAGRAM - ELECTRIC CONTROLS
13	ELECTRICAL DETAILS
14	HAND OPERATION ALTERNATE
2A	SUBSTRUCTURE (AS BUILT)
1	SURVEY (FOR REFERENCE ONLY)

RECORD DRAWING
OF WORK - AS - BUILT
Atlantic District
Auth. Rep. For The Contracting Officer
23 October 1953

CONT. NO. DA-30-075 ENG. 3249

REVISION	DATE	DESCRIPTION	BY
2	23 Oct 53	Record Work As Built	
1	19 April 51	General Revisions & Transformer House No 3 Relocated	

PARSONS, BRINCKERHOFF, HOGAN & MACDONALD
ARCHITECT - ENGINEER
NEW YORK, NEW YORK

DEPARTMENT OF THE ARMY
CORPS OF ENGINEERS
OFFICE OF THE DISTRICT ENGINEER
NEW YORK 5, NEW YORK

DRAWN BY: A.T.W.
TRACED BY: P.H.A.
CHECKED BY: A.B.J.
SUBMITTED: M.E. Fiore
ARCHITECT - ENGINEER
REVIEWED: ARCHITECT - ENGINEER
APPROVED: COLONEL
DATE: 21 JULY 1948

KINDLEY FIELD
LONG BIRD - HAMILTON ISLAND CAUSEWAY BRIDGE

GENERAL PLAN AND ELEVATION

FORT BELL, BERMUDA

RECOMMENDED: ENGINEER, CHIEF, ENGINEERING DIVISION

DRAWING NUMBER 11-06-01
SHEET 1 OF 14

TO ACCOMPANY SPECIFICATIONS DATED

FILE NO. 7503-201

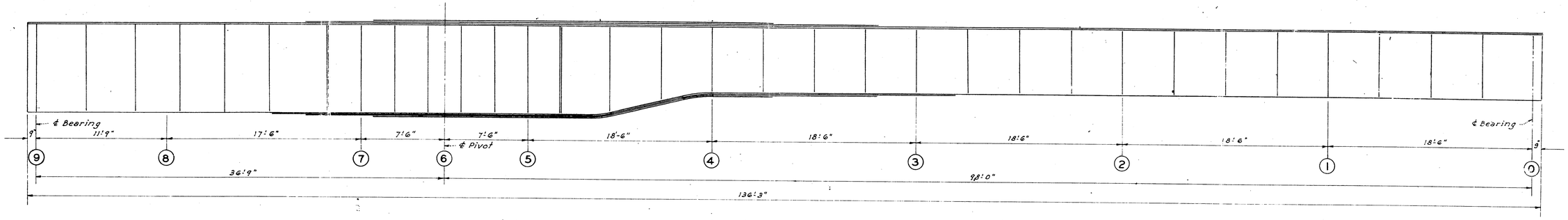

MAIN GIRDER

1 0 1 2 3 4 5

Scale: ¼"=1'-0"

BRIDGE OPEN - DEAD LOADS ONLY											
ITEM	SECTION	9	8	7	6	5	4	3	2	1	0
Dead Load Increments		1.24	68.47	124.23	—	16.68	15.44	18.90	14.45	18.99	0.57
SHEAR IN KIPS	Dead	1.24	69.71	193.94	58.77	80.03	63.35	47.91	34.01	19.56	0.57
	20% Impact	0.25	13.94	38.79	11.75	16.01	12.67	9.58	6.80	3.91	0.11
	Total	1.49	83.65	232.73	70.52	96.04	76.02	57.49	40.81	23.47	0.68
Gross Section Req'd. (in²) @ 11 K/□"		0.14	7.60	21.17	6.41	8.73	6.91	5.23	3.72	2.13	0.06
Web Section Used (in²)		48.00	48.00	48.00	48.00	48.00	39.00	29.25	29.25	29.25	29.25
MOMENT IN FT. KIPS	Dead	0.5	304	2943	3204	3667	2486	1457	698	203	0.2
	20% Impact	0.1	61	589	641	733	497	291	140	41	0
	Total	0.6	365	3532	3845	4400	2983	1748	838	244	0.2
Net Section Mod. Req'd (in³) @ 18 K/□"		0.4	243	2355	2563	2933	1988	1165	559	163	0.1
SECTION USED	Web	96×½	96×½	96×½	96×½	96×½	78×½	78×⅜	78×⅜	78×⅜	78×⅜
	Flange Ls	6×6×7/16	6×6×7/16	6×6×7/16	6×6×7/16	6×6×7/16	6×6×7/16	6×6×7/16	6×6×7/16	6×6×7/16	6×6×7/16
	Cover Pls	PL 14×7/16	PL 14×7/16	2 PL 14×7/16	2 PL 14×7/16	2 PL 14×7/16	2 PL 14×7/16	2 PL 14×7/16	PL 14×7/16	PL 14×⅜	PL 14×⅜
	Cover Pls			2 PL 14×7/16	2 PL 14×7/16	2 PL 14×7/16	2 PL 14×7/16				
	Cover Pls				2 PL 14×7/16	2 PL 14×7/16	2 PL 14×7/16				
Net Section Mod. Used (in³)		1593	1593	2489	3009	3009	2369	1427	1118	1114	1114

BRIDGE CLOSED - NO DEAD LOAD END REACTIONS - CONTINUOUS LIVE LOAD											
ITEM	SECTION	9	8	7	6	5	4	3	2	1	0
SHEAR IN KIPS	Dead Load	-1.24	-69.71	-193.94	-58.77	+80.03	+63.35	+47.91	+34.01	+19.56	+0.57
	0.70 Dead Load	-0.87	-48.80	-135.76	-41.14	+56.02	+44.35	+33.54	+23.81	+13.69	+0.40
	Live Load	+19.73	-8.32	-18.96	-50.85	+31.88	+25.41	+18.38	+11.41	+5.10/-4.70	-23.79
	Impact	+5.93	-2.50	-5.69	-15.26	+9.56	+7.33	+5.51	+3.42	+1.53/-4.41	-7.14
	0.70 D.L.+L.L.+I	+24.79								-5.42	-30.53
	Reversal	±0.62								±2.71	±0.29
	0.70 D.L.+LL.+I+Rev.	+25.41								-8.13	-30.82
	D.L.+L.L.+I		-80.53	-218.59	-124.88	+121.47	+96.09	+71.80	+48.84	+26.19	
	D.L.+L.L.+I+Rev.									+28.90	
	Design Shear	+25.41	-80.53	-218.59	-124.88	+121.47	+96.09	+71.80	+48.84	+28.90	-30.82
Gross Section Req'd. (in²) @ 11 K/□"		2.31	7.32	19.87	11.35	11.04	8.74	6.53	4.41	2.63	2.80
Web Section Used (in²)		48.00	48.00	48.00	48.00	48.00	39.00	29.25	29.25	29.25	29.25
MOMENT IN FT. KIPS	Dead Load	-0.5	-304	-2943	-3204	-3667	-2486	-1457	-698	-203	-0.2
	0.70 Dead Load	-0.4	-213	-2060	-2243	-2567	-1740	-1020	-489	-142	-0.1
	Live Load	0	-43/-100	-72	-263	-536	-160	-1.5	-1.0/-319	-0.5/-258	0
	Impact		-13/-30	-22	-79	-161	-48	-0.5	-0.3/-96	-0.2/-78	
	0.70 D.L.+L.L.+I		-83						-74	+194	
	Reversal									±97	
	0.70 D.L.+LL.+I+Rev.									+291	
	D.L.+L.L.+I		-309.6	-3037	-3546	-4364	-2694	-1459	-699.3	-203.7	
	D.L.+L.L.+I+Rev.									-300.7	
	Design Moment	-0.5	-309.6	-3037	-3546	-4364	-2694	-1459	-699.3	-300.7	-0.2
Net Section Mod. Req'd. (in³) @ 18 K/□"		—	206	2025	2364	2909	1796	973	466	200	—
Net Section Mod. Used (in³)		1593	1593	2489	3009	3009	2369	1427	1118	1114	1114

BRIDGE CLOSED - ENDS RAISED - CONTINUOUS LIVE LOAD											
ITEM	SECTION	9	8	7	6	5	4	3	2	1	0
SHEAR IN KIPS	Dead Load	-1.24	-27.39	-151.62	-60.02	+66.49	+49.81	+34.37	+20.47	+6.02	+0.57
	0.70 Dead Load	-0.87	-19.17	-106.13	-42.01	+46.54	+34.87	+24.06	+14.33	+4.21	+0.40
	Live Load	+19.73	-8.32	-18.96	-50.85	+31.88	+25.41	+18.38	+11.41/-5.98	+5.10/-14.70	-23.79
	Impact	+5.93	-2.50	-5.69	-15.26	+9.56	+7.33	+5.51	+3.42/-2.38	+1.53/-4.41	-7.14
	0.70 D.L.+L.L.+I	+24.79							+4.02	-14.90	-30.53
	Reversal	±0.62								±3.01	±0.29
	0.70 D.L.+LL.+I+Rev.	+25.41								-17.91	-30.82
	D.L.+L.L.+I		-38.21	-176.27	-126.13	+107.93	+82.55	+58.26	+35.30	+12.65	
	D.L.+L.L.+I+Rev.									+15.66	
	Design Shear	+25.41	-38.21	-176.27	-126.13	+107.93	+82.55	+58.26	+35.30	-17.91	-30.82
Gross Section Req'd. (in²) @ 11 K/□"		2.31	3.47	16.02	11.47	9.81	7.50	5.30	3.21	1.63	2.80
Web Section Used (in²)		48.00	48.00	48.00	48.00	48.00	39.00	29.25	29.25	29.25	29.25
MOMENT IN FT. KIPS	Dead Load	-0.5	+192	-1708	-1979	-2452	-1493	-712	-202	+45	-0.2
	0.70 Dead Load	-0.4	+134	-1198	-1385	-1716	-1045	-498	-141	+32	-0.1
	Live Load	0	-43/-100	-72	-263	-536	-160	-1.5	-1.0/-319	-0.5/-258	0
	Impact		-13/-30	-22	-79	-161	-48	-0.5	-0.3/-96	-0.2/-78	
	0.70 D.L.+L.L.+I								+274	+31.3	
	Reversal								±101		
	0.70 D.L.+LL.+I+Rev.								+375		
	D.L.+L.L.+I		+322	-1802	-2321	-3149	-1701	-714	-203.3	+381	
	D.L.+L.L.+I+Rev.								-304.3		
	Design Moment	-0.5	+322	-1802	-2321	-3149	-1701	-714	+375	+381	-0.2
Net Section Mod. Req'd. (in³) @ 18 K/□"		—	215	1201	1547	2099	1134	476	250	254	—
Net Section Mod. Used		1593	1593	2489	3009	3009	2369	1427	1118	1114	1114

MOMENTS AND SHEARS IN FLOORBEAMS								
ITEM	SECTION	FB7	FB6	FB5	FB4	FB3	FB2	FB1
SHEAR IN KIPS	Dead	55.2	42.3	100.6	12.0	102.3	1.8	3.8
	Live	20.0	14.4	18.8	16.0	57.9	12.3	13.8
	Impact	6.0	4.3	5.6	4.8	17.4	3.7	5.9
	Total	81.2	61.0	125.0	32.8	177.6	17.8	29.5
Gross Section Req'd. (in²) @ 11 K/□"		7.37	5.55	11.4	2.98	16.1	1.62	2.68
Web Section Used (in²)				44×7/16		48×7/16		
MOMENT IN FT. KIPS	Dead	166	255	718	72.0	734	10.5	11.3
	Live	140	101	135	112.0	420	86.0	138.8
	Impact	42	30	40	32.6	126	25.8	41.6
	Total	348	386	893	217.6	1280	122.3	191.7
Net Section Mod. Req'd. (in³) @ 18 K/□"		232	257	596	145	852	81.6	128
SECTION USED	Web	36WF150	30WF108	44×7/16	27WF94	48×7/16	18WF50	24WF76
	Flange Ls			4 Ls 6×6×3/4		4 Ls 6×6×3/4		
	Cover Pls.			2 PL 14×½		2 PL 14×½		
Net Section Mod. Used (in³)		476	299	871	202	965	89	145

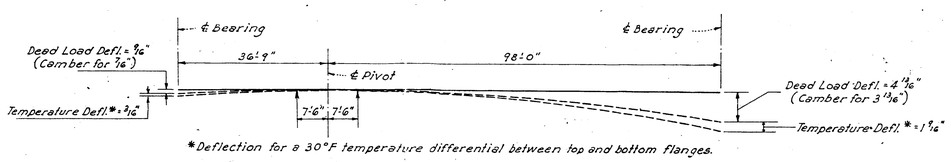

*Deflection for a 30°F temperature differential between top and bottom flanges.

DEFLECTION DIAGRAM

FORCES FOR NORMAL DEAD LOAD WEDGING

(No temperature differential)

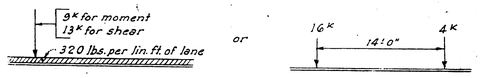

H-10 LIVE LOADING

(10 Ft. Lane)

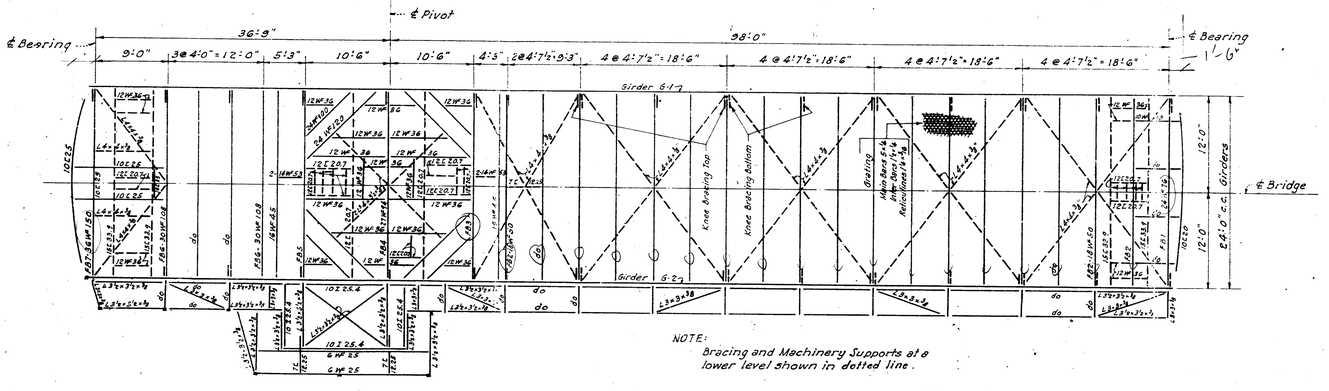

NOTE:
Bracing and Machinery Supports at a lower level shown in dotted line.

FRAMING PLAN

10' 5' 0'

Scale: ⅛"=1'-0"

GENERAL NOTES

1. SPECIFICATIONS—Structural design is in accordance with the standard specifications for fixed highway bridges of the A.A.S.H.O.-1944, except where modified by the standard specifications for movable railway bridges of the A.R.E.A.-1935.
2. LIVE LOAD— H-10
3. MATERIAL— Structural Carbon Steel unless noted.
4. RIVETS—⅞" ϕ HOLES 15/16" ϕ except for house and sidewalk connections, which shall have ⅞" ϕ rivets and 15/16" ϕ holes.
5. WIND LOADS—In the closed position, 30 lbs. per sq. ft. on 1½ times the exposed area plus 200 lbs. per lin. ft. on the live load, or 50 lbs. per sq. ft. on 1½ times the exposed area with no live load. In the open position, 15 lbs. per sq. ft. on 1½ times the exposed area.
6. WELDING—All welding shall be in accordance with the specifications for design, construction and repair of welded Highway and Railway Bridges of the American Welding Society-1941.
7. CONCRETE—Sections are designed for the following:
   $f'c$ = 2000 psi at 28 days
   fc = 650 psi
   n = 15
   fs = 18,000 psi
   all other allowable stresses ⅔ of those specified for $f'c$ = 3,000 psi in the A.A.S.H.O. specifications.
8. For Hand Operation alternate see Sheet No. 14.

RECORD DRAWING

OF WORK - AS - BUILT

Atlantic District
Auth. Rep. For The Contracting Officer
23 October 1953

[redacted]

CONT. NO. DA. 30-075 ENG. 3249

REVISION	DATE	DESCRIPTION	BY
		3249	
1	23 OCT. '53	RECORD WORK AS BUILT	

PARSONS, BRINCKERHOFF, HOGAN & MACDONALD
ARCHITECT - ENGINEER
NEW YORK, NEW YORK

DEPARTMENT OF THE ARMY
CORPS OF ENGINEERS
OFFICE OF THE DISTRICT ENGINEER
NEW YORK 5, NEW YORK

DRAWN BY: T.R.K.
TRACED BY: R.H.A.
CHECKED BY: A.B.J. & T.R.K.
SUBMITTED: M. E. Fiore
ARCHITECT - ENGINEER

KINDLEY FIELD
LONG BIRD - HAMILTON ISLAND CAUSEWAY BRIDGE

STRESS SHEET

FORT BELL — BERMUDA

REVIEWED: ARCHITECT - ENGINEER
RECOMMENDED: ENGINEER, CHIEF, ENGINEERING DIVISION

APPROVED: COLONEL, C. E., ACTING DISTRICT ENGINEER
DATE 21 JULY 1948

SCALE: AS SHOWN
DRAWING NUMBER 11-06-01
SHEET 4 OF 14

TO ACCOMPANY SPECIFICATIONS DATED

FILE NO. 7503 - 204

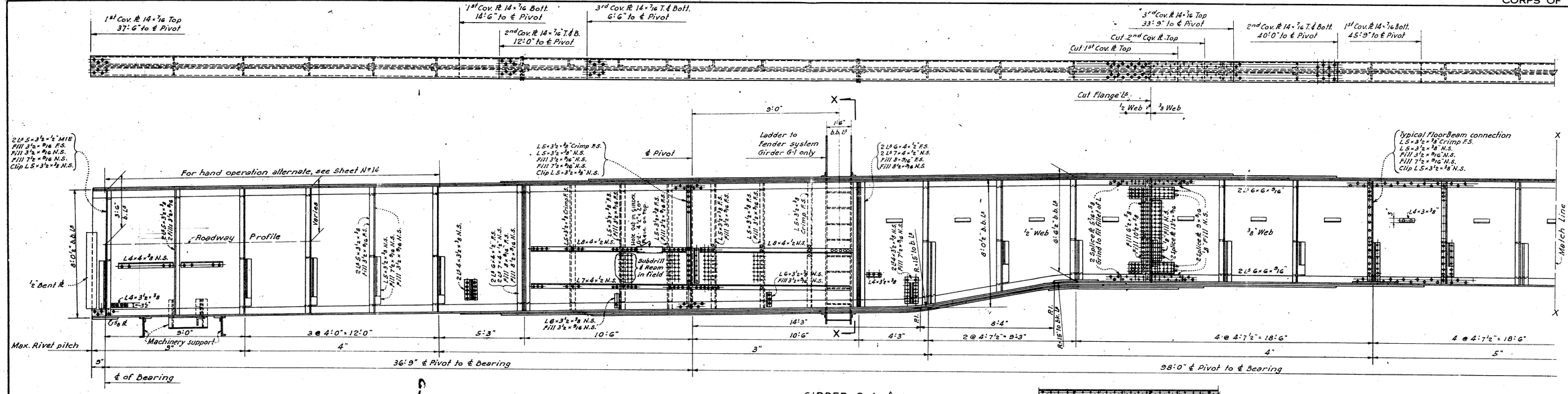

GIRDER G-1 △

Scale: 3/8" = 1'-0"

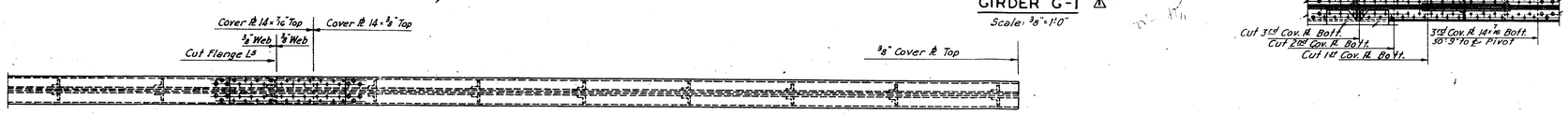

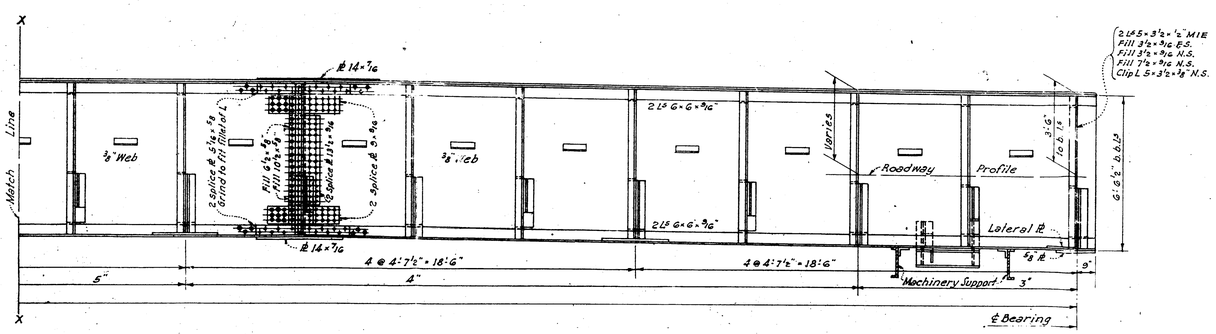

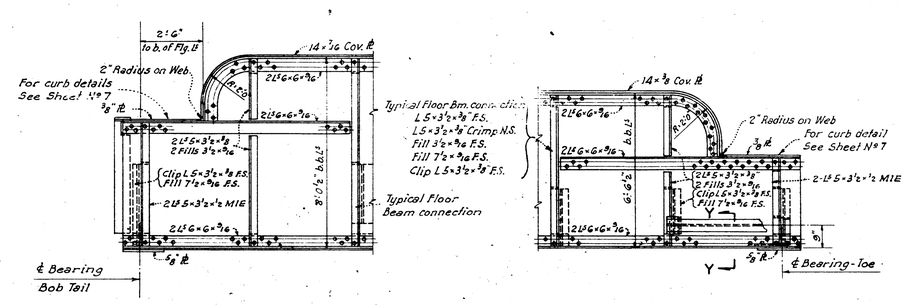

GIRDER G-2

Scale: 3/8" = 1'-0"

NOTE: Parts of Girder, including machinery supports, not shown hereon are similar to Girder G-1

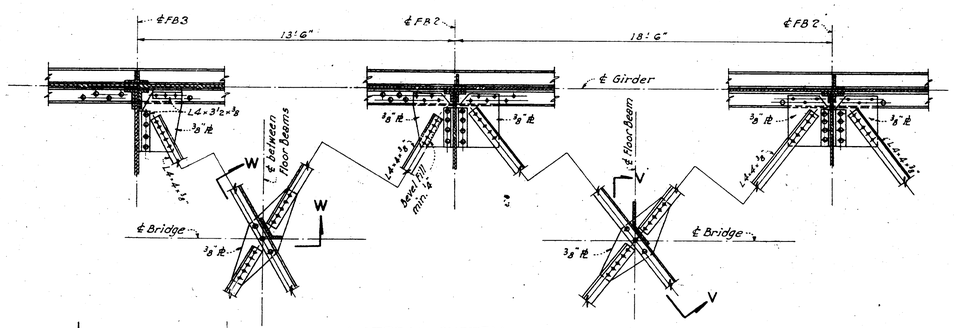

LATERAL SYSTEM

For Lateral details at FB1 & FB7 See Sheet N° 7

Scale: 1/2" = 1'-0"

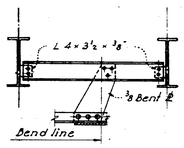

SECTION W-W
DEVELOPED

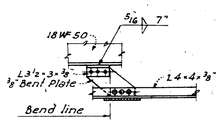

SECTION V-V
DEVELOPED

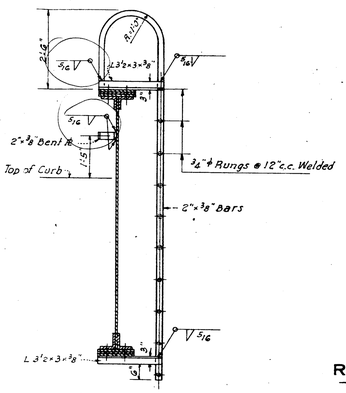

SECTION X-X

Scale: 1/2" = 1'-0"

— NOTES —

1. For General Notes see Sheet N° 4
2. For Details of Machinery supports see Sheets N° 9 & 10
3. Material Structural Carbon Steel.
4. Rivets 3/8" ϕ holes 15/16" ϕ except for house and sidewalk connections which shall have 3/4" ϕ rivets and 13/16" ϕ holes.
5. All stiffeners to have close fits top and bottom unless noted.
6. Girder shall be cambered for vertical curve in addition to partial dead load deflection as shown on Sheet N° 4
7. Location and number of field splices may be changed, with the approval of the Contracting Officer, to comply with the cambering and shipping requirements. Additional splices shall develop 100 percent of the sections spliced.
8. For details of hand operation alternate see Sheet N° 14

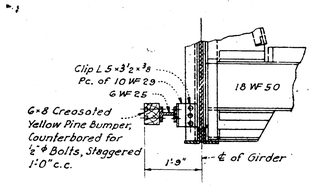

SECTION Y-Y

Scale: 1/2" = 1'-0"

RECORD DRAWING
OF WORK - AS - BUILT
Atlantic District
Auth. Rep. For The Contracting Officer
23 October 1953

[redacted]

CONT. NO. DA-30-075 ENG 3249

REVISION	DATE	DESCRIPTION	BY
1	23 OCT. '53	RECORD WORK AS BUILT	

PARSONS, BRINCKERHOFF, HOGAN & MACDONALD
ARCHITECT - ENGINEER
NEW YORK, NEW YORK

DEPARTMENT OF THE ARMY
CORPS OF ENGINEERS
OFFICE OF THE DISTRICT ENGINEER
NEW YORK 5, NEW YORK

DRAWN BY: J.S.W. T.R.K.
TRACED BY: R.H.A.
CHECKED BY: A.B.J.
SUBMITTED: M. E. Fiore
ARCHITECT - ENGINEER

KINDLEY FIELD
LONG BIRD - HAMILTON ISLAND CAUSEWAY BRIDGE

GIRDERS

FORT BELL BERMUDA

REVIEWED: ARCHITECT - ENGINEER
RECOMMENDED: ENGINEER, CHIEF, ENGINEERING DIVISION
APPROVED: COLONEL, C. E., ACTING DISTRICT ENGINEER
DATE: 21 JULY 1948
SCALE: 1" = 0 1/2 3/4 1" = 1'-0" and as noted
DRAWING NUMBER 11-06-01
SHEET 5 OF 14

TO ACCOMPANY SPECIFICATIONS DATED

FILE NO. 7503-205

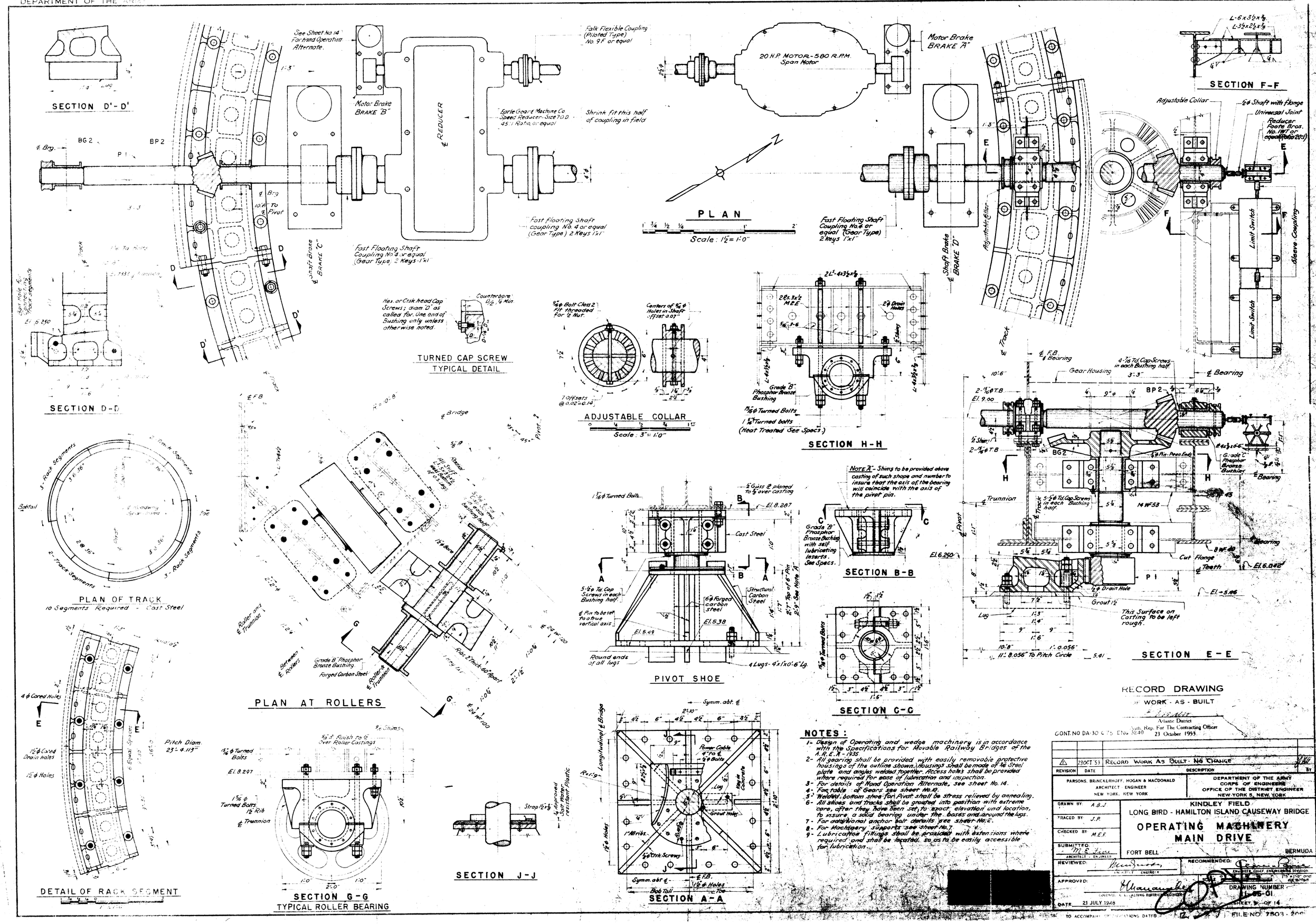
SECTION D'-D'
See Sheet No 14 For hand Operation Alternate.
Motor Brake BRAKE "B"
REDUCER
Falk Flexible Coupling (Piloted Type) No. 9F or equal
Earle Gear & Machine Co. Speed Reducer-Size 70.D 45:1 Ratio, or equal
Shrink fit this half of coupling in field
Fast Floating Shaft coupling No. 4 or equal (Gear Type) 2 Keys 1"x1"
Fast Floating Shaft Coupling No. 4 or equal (Gear Type) 2 Keys-1"x1"
Shaft Brake BRAKE "C"
BG 2
BP 2
P 1
10'6" To ℄ Pivot
20 H.P. MOTOR-580 R.P.M. Span Motor
Motor Brake BRAKE "A"
PLAN
Scale: 1½" = 1'-0"
Fast Floating Shaft Coupling No. 4 or equal (Gear Type) 2 Keys 1"x1"
Shaft Brake BRAKE "D"
Adjustable Collar
SECTION F-F
Adjustable Collar
½ ϕ Shaft with flange
Universal Joint
Reducer Foote Bros. No. 1917 or equal (ratio 20:1)
Limit Switch
Limit Switch
Sleeve Coupling
SECTION D-D
TURNED CAP SCREW TYPICAL DETAIL
Hex. or Csk. head Cap Screws; diam. "D" as called for. One end of Bushing only unless otherwise noted.
Counterbore D/2 ¼ Min.
ADJUSTABLE COLLAR
Scale: 3" = 1'-0"
Centers of ⅝" ϕ Holes to Shaft offset 0.07"
SECTION H-H
Grade "B" Phosphor Bronze Bushing
Turned Bolts
Turned bolts (Heat Treated See Specs.)
Drain Holes
SECTION E-E
Gear Housing
Bearing
Trunnion
Cut Flange
Grout 1½
This Surface on Casting To be left rough.
Grade "C" Phosphor Bronze Bushing
Note "A" - Shims to be provided above casting of such shape and number to insure that the axis of the bearing will coincide with the axis of the pivot pin.
SECTION B-B
Grade "B" Phosphor Bronze Bushing with self lubricating inserts See Specs.
SECTION C-C
PIVOT SHOE
Cast Steel
Structural Carbon Steel
Round ends of all lugs
4 Lugs-4"x1"x0'-6" Lg.
SECTION A-A
Power Cable
Grout Holes
Bob Tail
PLAN OF TRACK
10 Segments Required - Cast Steel
3 - Rack Segments
2 - Track Segments
PLAN AT ROLLERS
Grade "B" Phosphor Bronze Bushing
Forged Carbon Steel
Roller and ℄ Trunnion
Between ℄ Rollers
Ribs 2 Track-60" Apart
DETAIL OF RACK SEGMENT
Pitch Diam. 23'-4.113"
SECTION G-G
TYPICAL ROLLER BEARING
Shims
Turned Bolts
Turned Bolts
℄ Trunnion
SECTION J-J
Strap
Approved Salt Water Resistant Plastic
NOTES:
1- Design of Operating and wedge machinery is in accordance with the Specifications for Movable Railway Bridges of the A.R.E.A. - 1935.
2- All gearing shall be provided with easily removable protective housings of the outline shown. Housings shall be made of ⅛" Steel plate and angles welded together. Access holes shall be provided where required for ease of lubrication and inspection.
3- For details of Hand Operation Alternate, see sheet No. 14.
4- For table of Gears see sheet No. 10.
5- Welded bottom shoe for Pivot shall be stress relieved by annealing.
6- All shoes and tracks shall be grouted into position with extreme care, after they have been set to exact elevation and location, to insure a solid bearing under the bases and around the lugs.
7- For additional anchor bolt details see sheet No. 2.
8- For Machinery supports see sheet No. 7.
9- Lubrication fittings shall be provided with extensions where required and shall be located so as to be easily accessible for lubrication.
RECORD DRAWING
WORK - AS - BUILT
Atlantic District
Auth. Rep. For The Contracting Officer
CONT. NO DA-30-065-ENG-3240 23 October 1953
REVISION DATE DESCRIPTION BY
23 OCT '53 RECORD WORK AS BUILT - NO CHANGE
PARSONS, BRINCKERHOFF, HOGAN & MACDONALD
ARCHITECT ENGINEER
NEW YORK, NEW YORK
DEPARTMENT OF THE ARMY
CORPS OF ENGINEERS
OFFICE OF THE DISTRICT ENGINEER
NEW YORK 5, NEW YORK
DRAWN BY: A.B.J.
TRACED BY: J.P.
CHECKED BY: M.E.F.
SUBMITTED: M. E. Fuss
ARCHITECT - ENGINEER
KINDLEY FIELD
LONG BIRD - HAMILTON ISLAND CAUSEWAY BRIDGE
OPERATING MACHINERY
MAIN DRIVE
FORT BELL BERMUDA
REVIEWED:
RECOMMENDED:
APPROVED:
COLONEL, C.E. ACTING DISTRICT ENGINEER
DATE 21 JULY 1948
DRAWING NUMBER 11-95-01
SHEET 9 OF 14
TO ACCOMPANY SPECIFICATIONS DATED
FILE NO. 7503-200

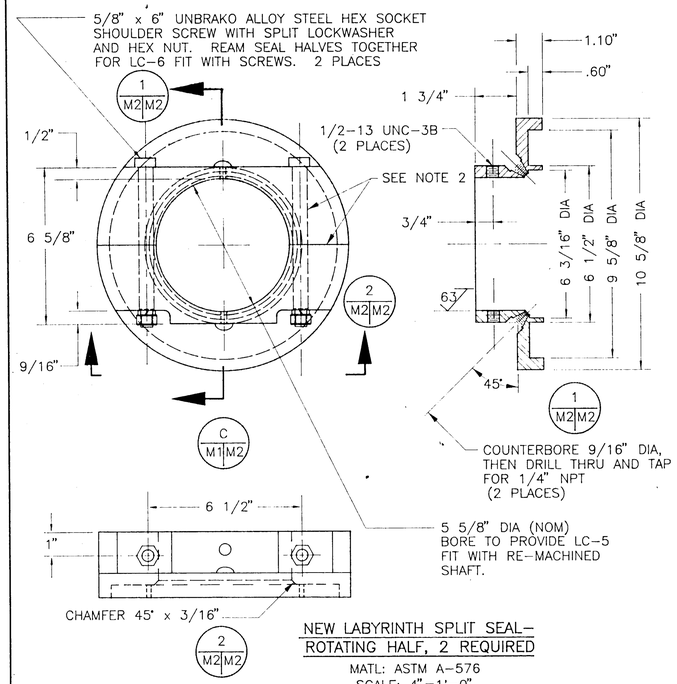

NEW LABYRINTH SPLIT SEAL-ROTATING HALF, 2 REQUIRED

MATL: ASTM A-576
SCALE: 4"=1'-0"

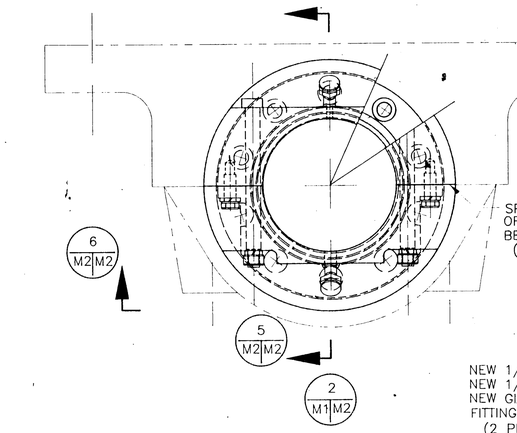

SCALE: 4"=1'-0"

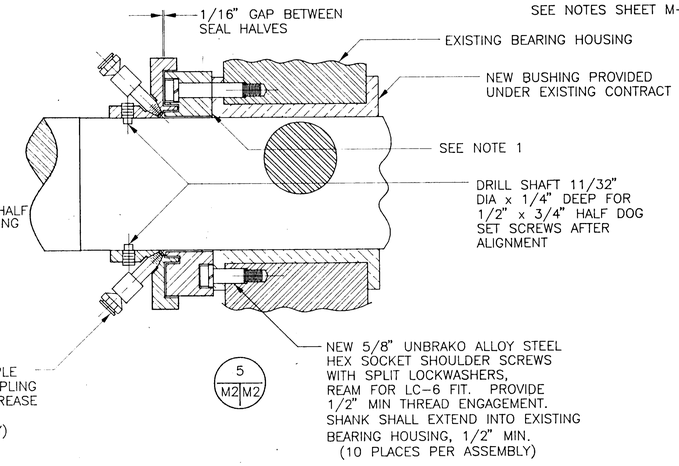

SEE NOTES SHEET M-1

NOTES:

1. COAT MATING SURFACES OF FIXED AND ROTATING SEAL HALVES AND BETWEEN LOWER SURFACE OF FIXED SEAL HALF AND BRONZE BUSHING FLANGE WITH FORMAGASKET BY PERMATEX OR EQUAL AT ASSEMBLY.
2. MACHINE SPLIT AND FOR SHOULDER SCREWS AT SPLIT FIRST, THEN PERFORM REMAINING MACHINING WITH HALVES ASSEMBLED.

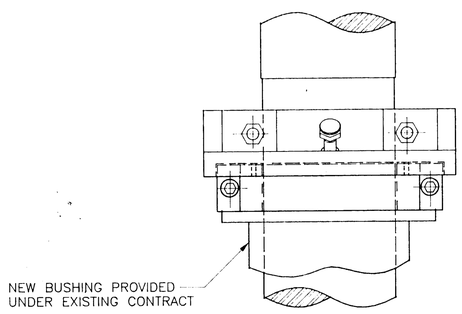

BEARING HOUSING NOT SHOWN

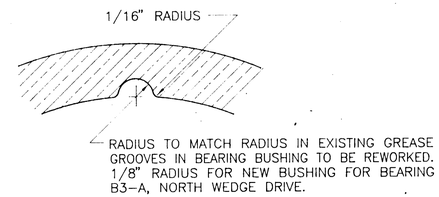

NEW GREASE DISTRIBUTION GROOVES. MACHINE NEW GREASE GROOVE TO CONNECT GREASE ENTRY HOLE TO GREASE DISTRIBUTION GROOVES IN ALL JOURNAL BEARINGS THAT DO NOT HAVE ONE NOW. MACHINE FIGURE EIGHT GROOVES IN BEARING B3-A, NORTH WEDGE DRIVE.

NEW AND REWORKED GREASE GROOVES

SCALE: NONE

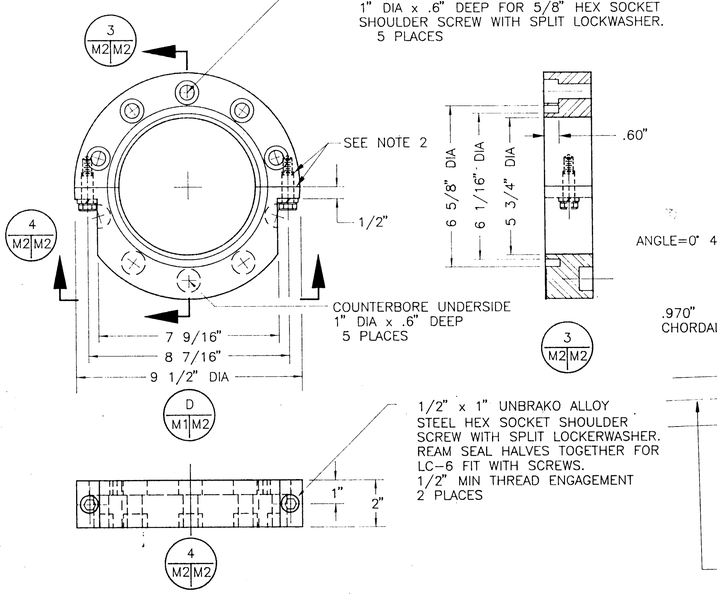

NEW LABYRINTH SPLIT SEAL-FIXED HALF, 2 REQUIRED

MATL: ASTM A576
SCALE: 4"=1'-0"

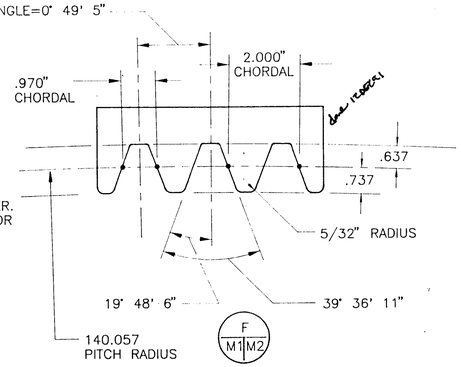

NEW TEMPLATE FOR WELD REPAIRING RACK

SEE SPECIFICATIONS, MATL: 1/4" STEEL PLATE

SCALE: 6"=1"-0"

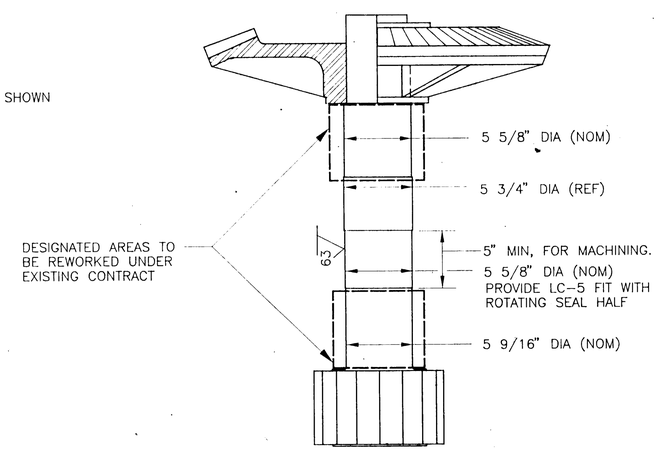

RACK PINION SHAFT, REWORK AS SHOWN
2 INVOLVED

SCALE: 2"=1'-0"

0 3" 6" 9" 1'
SCALE: 2"=1'-0"

0 3" 6" 9" 1'
SCALE: 4"=1'-0"

0 3" 6" 9" 1'
SCALE:

TOLERANCE, UNLESS NOTED OTHERWISE	
DIMENSION	TOLERANCE
WHOLE	± 1/64
FRACTION	± 1/64
X.X	± .010
X.XX	± .005
X.XXX	± .002

REVISIONS

SYM.	DESCRIPTION	DATE	APPROVED

SUBCONSULTANT: STAFFORD ENGINEERING, INC P.O. BOX 2407 BALA CYNWYD, PA 19004
APPROVED
ACTIVITY - SATISFACTORY TO
DATE
FOR EFD FOR COMMANDER NAVFAC

WILBUR SMITH ASSOCIATES CONSULTING ENGINEERS 2001 TESTA DRIVE FALLS CHURCH, VA 22042

A/E BH DESIGN
BF DRAWN
BH REVIEW
MCS CHIEF ARCH./ENGR.
PROJECT MANAGER
FIRE PROTECTION
QUALITY CONTROL
BRANCH MANAGER
DESIGN DIRECTOR

DEPARTMENT OF THE NAVY
NAVAL STATION ATLANTIC DIVISION
NAVAL FACILITIES ENGINEERING COMMAND
NORFOLK, VIRGINIA

LONGBIRD BRIDGE, BERMUDA
OPERATING MACHINERY REHABILITATION
SPAN DRIVE DETAILS

CODE ID. NO 80091 SIZE D
SCALE:
EFD NO.
STA. PROJ. NO.
SPEC. NO.
CONSTRN. CONTR. NO.
NAVFAC DRAWING NO.
SHEET
9M-2

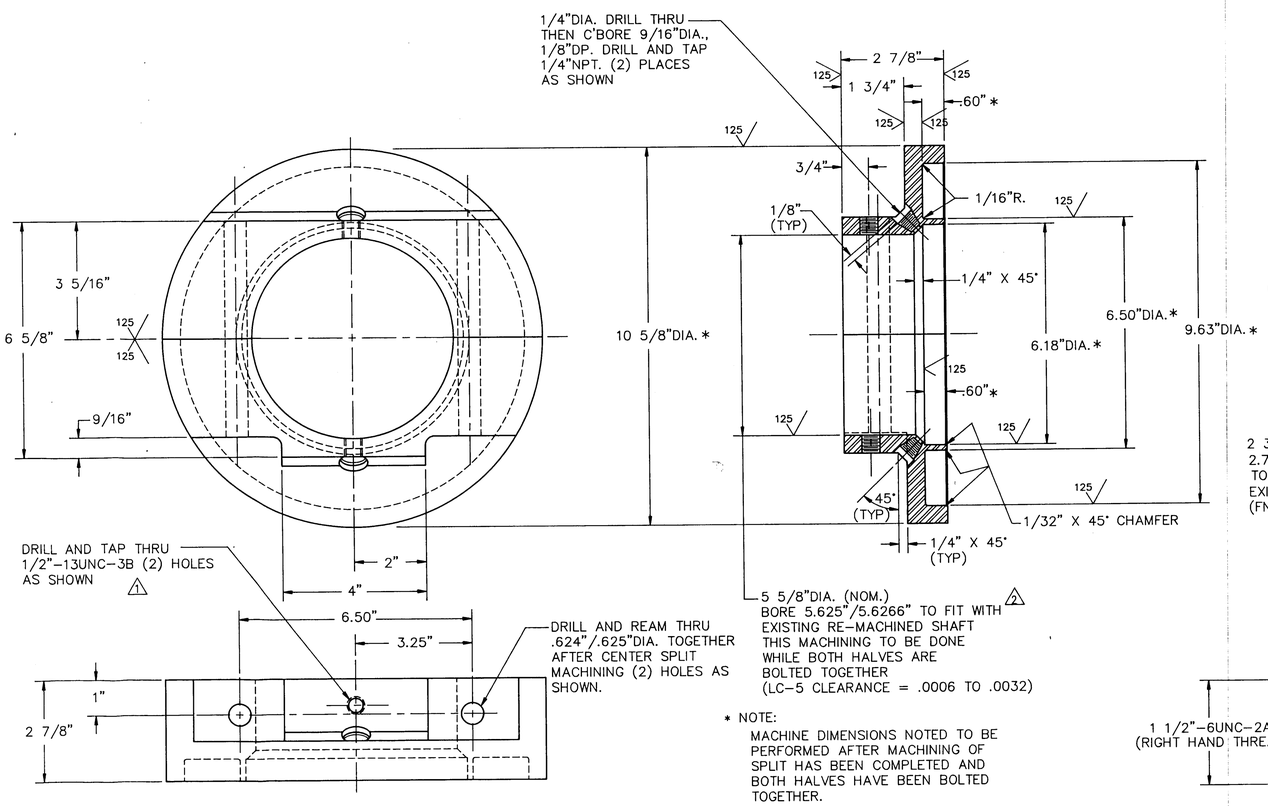

* NOTE:
MACHINE DIMENSIONS NOTED TO BE PERFORMED AFTER MACHINING OF SPLIT HAS BEEN COMPLETED AND BOTH HALVES HAVE BEEN BOLTED TOGETHER.

2 – ROTATING LABYRINTH SPLIT SEAL (MK.389-1-1)

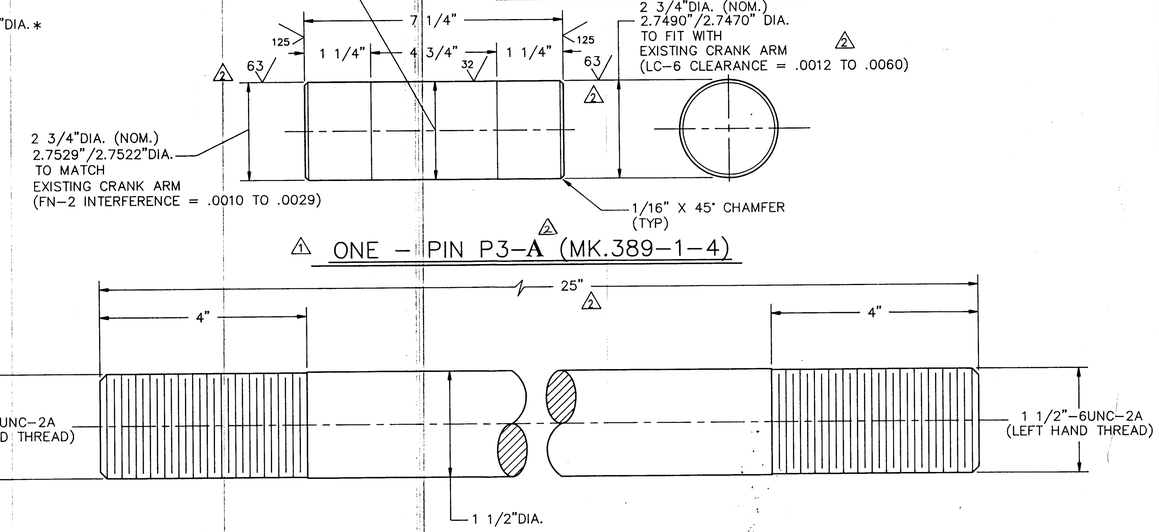

1 ONE – PIN P3-A (MK.389-1-4)

2 – VERTICAL CONNECTING ROD (MK.389-1-3)

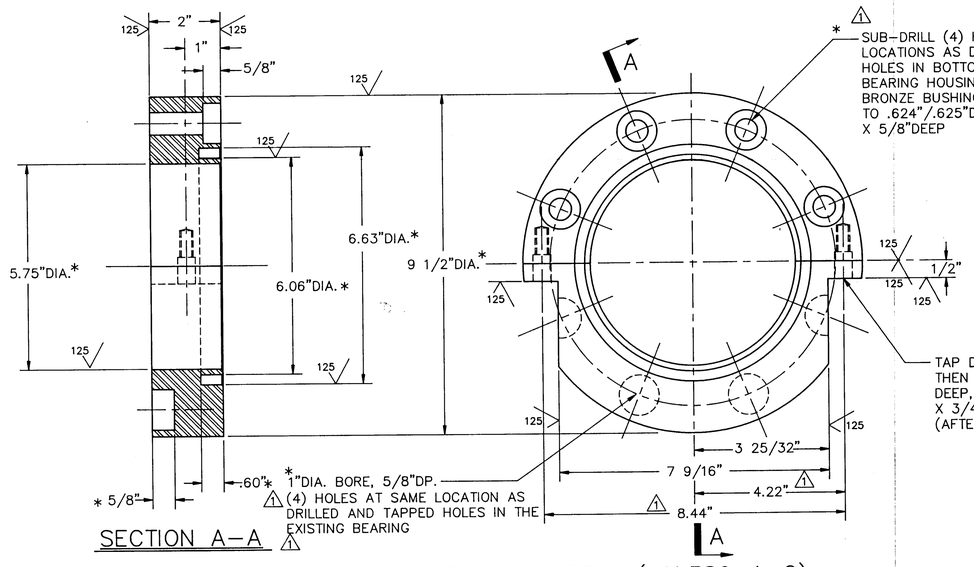

SECTION A-A

* NOTE:
MACHINE DIMENSIONS NOTED TO BE PERFORMED AFTER MACHINING OF SPLIT HAS BEEN COMPLETED AND BOTH HALVES HAVE BEEN BOLTED TOGETHER.

2 – STATIONARY LABYRINTH SPLIT SEAL (MK.389-1-2)

BILL OF MATERIAL

MARK NO.	QTY.	DESCRIPTION	NO. PER UNIT	UNIT WGT.	P.O. NO.
389-1-1	2	ROTATING LABYRINTH SPLIT SEAL			
	2	PL 3 1/4" X 11 1/4"DIA. ASTM A576			
389-1-2	2	STATIONARY LABYRINTH SPLIT SEAL			
	2	PL 2 1/2" X 10"DIA. ASTM A576			
389-1-3	2	VERTICAL CONNECTING ROD			
	2	BAR 1 1/2"DIA. x 2'-2"LG. ASTM A576 GR. 1045			
389-1-4	ONE	PIN P3-B			
	ONE	BAR 3" DIA. X 0'-7 1/2"LG. ASTM A576 GR. 1040			

NOTES

1.) FOR PAINT AND PROTECTION OF MACHINERY SEE DRAWING No. 389-E1.

DEPARTMENT OF THE NAVY
NAVAL FACILITIES ENGINEERING COMMAND
ATLANTIC DIVISION
NAVAL STATION NORFOLK, VIRGINIA
LONGBIRD BRIDGE, BERMUDA

AS BUILTS
P-1052

STEWARD MACHINE CO.
BIRMINGHAM, ALABAMA

MACHINING TOLERANCES UNLESS OTHERWISE SPECIFIED		
DIMENSION		TOLERANCE
WHOLE		±1/64"
FRACTIONAL		±1/64"
DECIMAL	.X	±.010"
	.XX	±.005"
	.XXX	±.002"
ANGLES		±1/2°

REV.	DATE	DESCRIPTION	ZONE	BY
2	7/20/92	AS BUILT		EWK
1	3-5-92	APPROVAL CHANGES		

REVISIONS

SUBJECT: BRIDGE OPERATING MACHINERY
DETAILS: ROTATING AND STATIONARY LABYRINTH SPLIT SEAL & VERTICAL CONNECTING ROD
CUSTOMER: BLUERIDGE GENERAL, INC.
LOCATION: NORFOLK, VIRGINIA
DRAWN: S. LEE
SCALE: NONE
REV. NO. 2
CHECKED: RCZ
DATE: 12-19-91
JOB NO. 4401-B
DWG. NO. 389-1

ANNEX D.04 – 2002 DELCAN LONGBIRD DRAWINGS

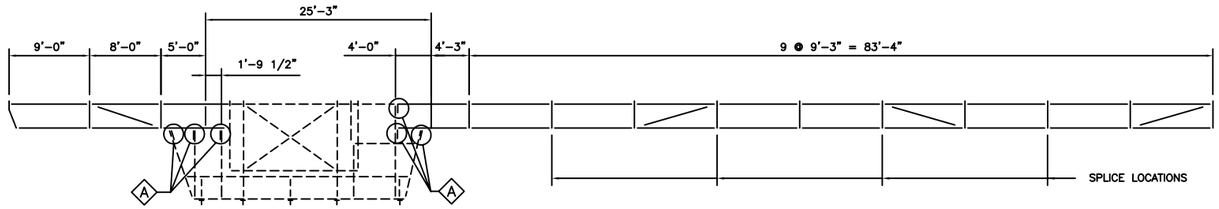

STEEL FRAMING PLAN
1/8" = 1'-0"

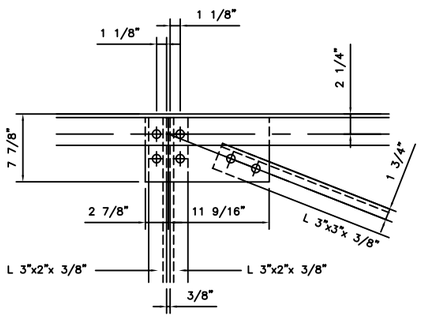

TYP. CONNECTION DETAIL
1 1/2" = 1'-0"

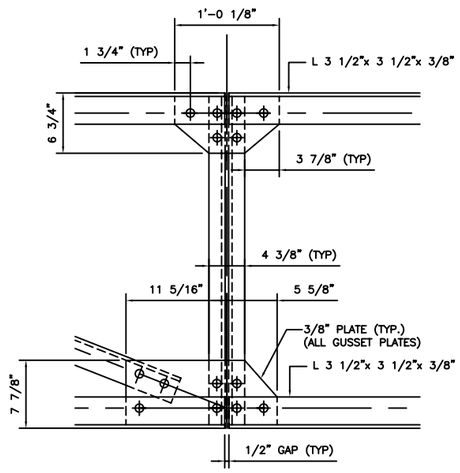

TYP. CONNECTION DETAIL (AT SPLICE)
1 1/2" = 1'-0"

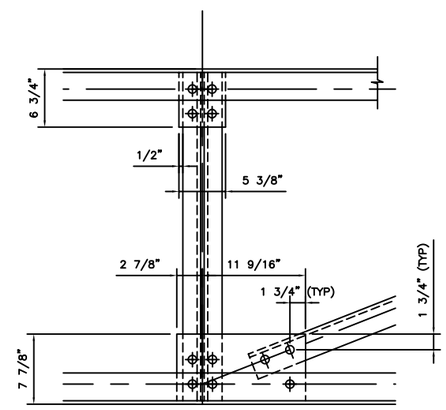

TYP. CONNECTION DETAIL (W/O SPLICE)
1 1/2" = 1'-0"

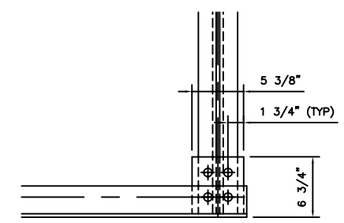

TYP. END CONNECTION DETAIL
1 1/2" = 1'-0"

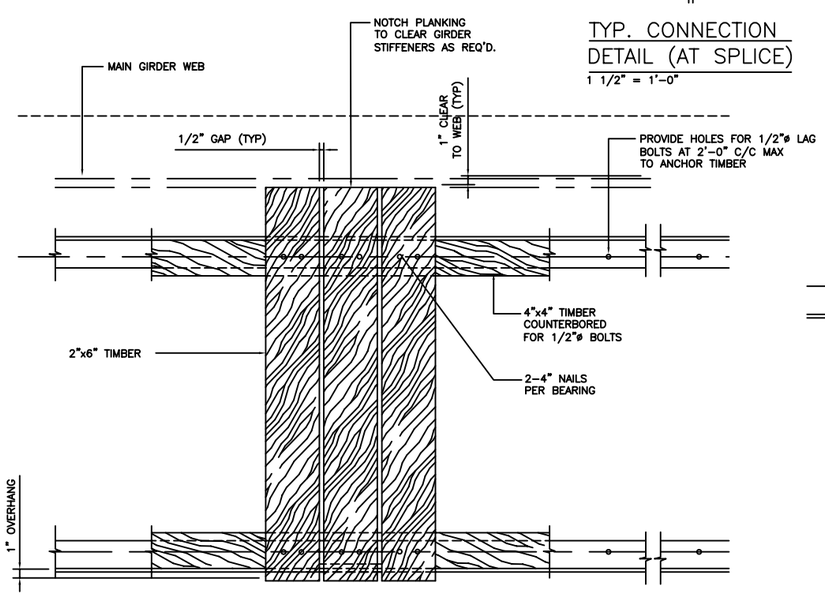

TYP. DECKING DETAIL
1 1/2" = 1'-0"

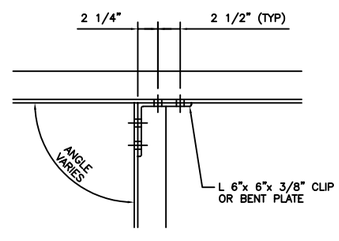

A
1 1/2" = 1'-0"
(6 REQUIRED)

LEGEND

- INDICATES LOCATION OF NEW HOLE REQUIRED IN EXISTING AND/OR NEW STEEL. COMPONENTS TO BE FASTENED WITH NEW BOLT.
- INDICATES LOCATION OF EXISTING RIVET OR BOLT TO BE REMOVED AND REPLACED WITH NEW BOLT THROUGH EXISTING STEEL AND NEW CONNECTION STEEL
- INDICATES LOCATION OF EXISTING RIVET OR BOLT TO REMAIN IN PLACE. (SHOWN FOR INFORMATION PURPOSES ONLY)

NOTES:

1. THIS DRAWING TO READ IN CONJUNCTION WITH DWGS. S6, S8 AND S9
2. SEE DWG. S6 FOR NOTES
3. SOME FINAL DIMENSIONS FROM THOSE SHOWN. SEE R-CO SHOP DRAWINGS #

THE MINISTRY OF WORKS AND ENGINEERING

P.O. Box HM525 Hamilton HMCX Bermuda
Phone: (441)295-5151

DELCAN INTERNATIONAL
Toronto Canada

GENERAL NOTES:

1. ALL DIMENSIONS TO BE VERIFIED IN THE FIELD BY THE CONTRACTOR.

ISSUED FOR: CONSTRUCTION

AMENDMENTS:

NO:	REVISION	APP	DATE:
1	AS-BUILT	J.C.	07/03/2001
0	ISSUE FOR CONSTRUCTION		31/03/2000

SCALE: AS SHOWN

SURVEY
PREPARED BY: N/A DATE:

DESIGN
PREPARED BY: B.I.A. DATE: 31/01/2000
CHECKED BY: J.P.S. DATE: 31/01/2000

DRAWING
PREPARED BY: A.B.M. DATE: 31/01/2000
CHECKED BY: B.I.A. DATE: 31/01/2000

APPROVED BY:

PROJECT NUMBER:
44/21/02

PROJECT NAME:
LONGBIRD BRIDGE REHABILITATION

DRAWING FILE NO: S7.DWG ACAD R-14

SHEET TITLE:
WALKWAY AND CONTROL HOUSE-2

SHEET NUMBER: S7
REVISION 1

LICENSED PROFESSIONAL ENGINEER B.I. ARCHIBALD PROVINCE OF ONTARIO

LICENSED PROFESSIONAL ENGINEER J.P. STEPHENSON PROVINCE OF ONTARIO

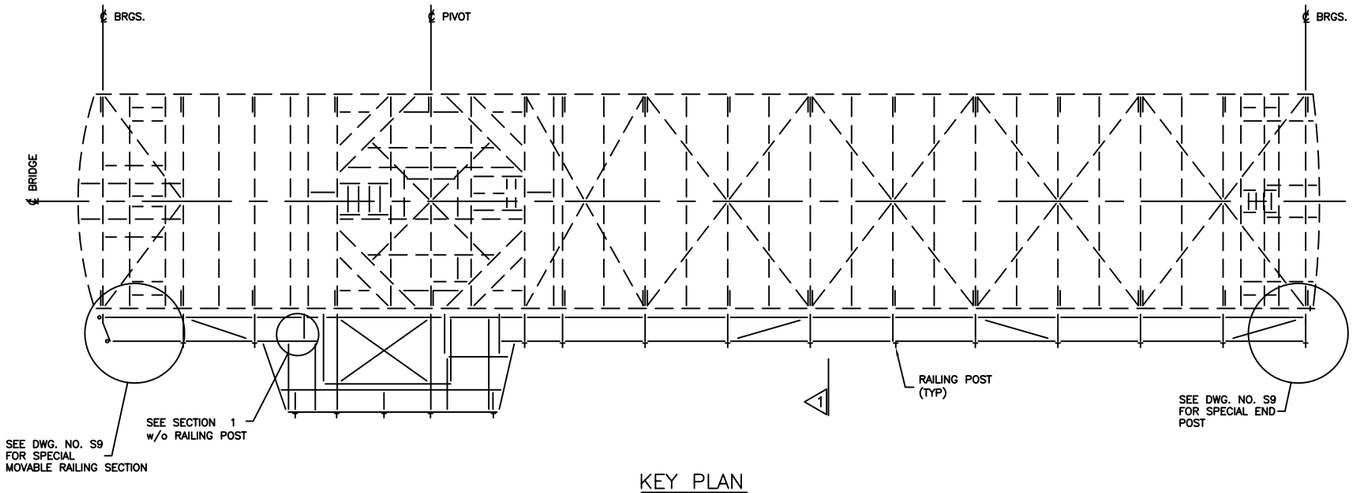

LEGEND

- INDICATES LOCATION OF NEW HOLE REQUIRED IN EXISTING AND/OR NEW STEEL. COMPONENTS TO BE FASTENED WITH NEW BOLT.
- INDICATES LOCATION OF EXISTING RIVET OR BOLT TO BE REMOVED AND REPLACED WITH NEW BOLT THROUGH EXISTING STEEL AND NEW CONNECTION STEEL
- INDICATES LOCATION OF EXISTING RIVET OR BOLT TO REMAIN IN PLACE. (SHOWN FOR INFORMATION PURPOSES ONLY)

NOTES:

1. THIS DRAWING TO BE READ IN CONJUNCTION WITH DWGS. S7, S8 &S9.
2. ALL BOLTS TO BE 3/4" DIA. WITH 13/16" DIA. HOLES UNLESS NOTED OTHERWISE.
3. (1) FINAL DIMENSIONS AS PER FIELD MEASUREMENTS AND SHOWN ON R-CO SHOP DRAWINGS.

KEY PLAN

1/8" = 1'-0"

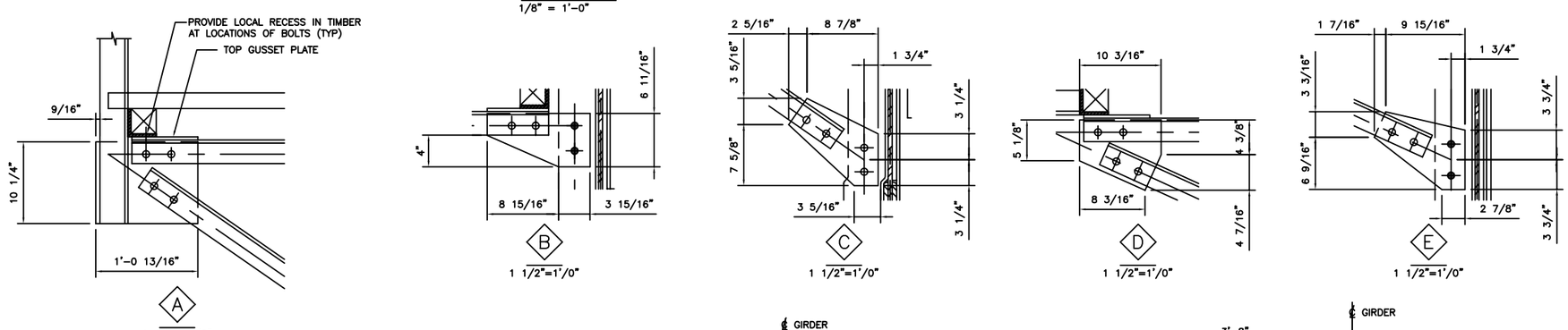

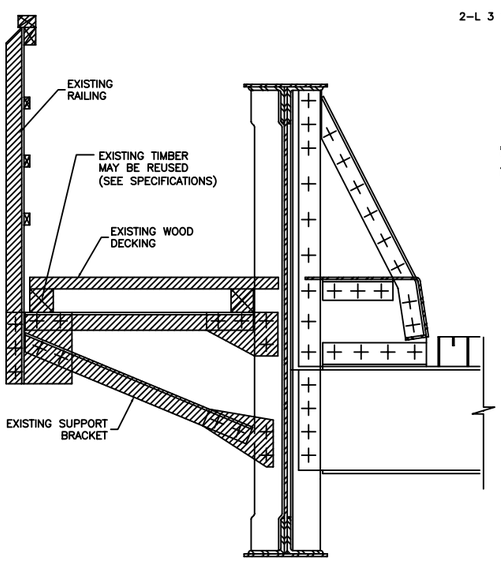

1 REMOVALS (TYP)

1"=1'-0"

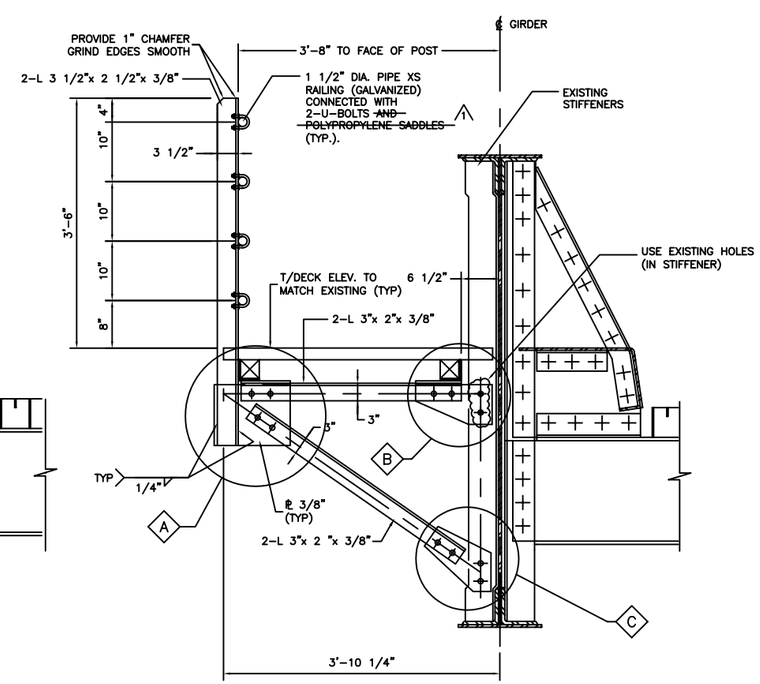

1 NEW (W/RAILING POST)

1"=1'-0"

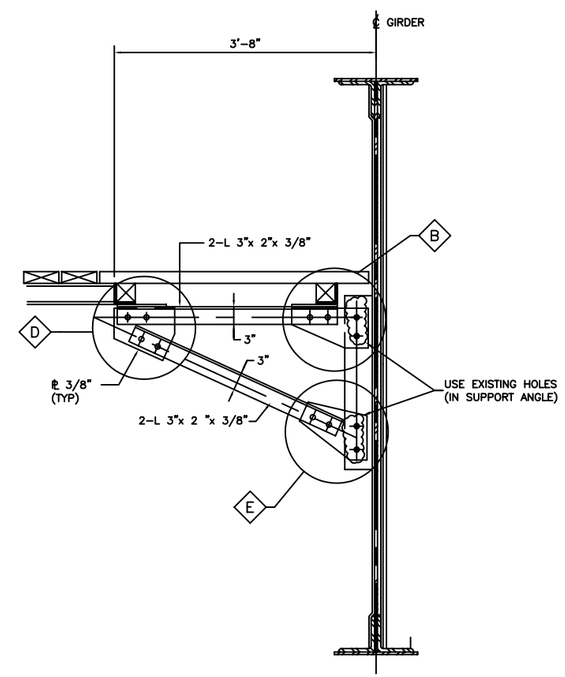

1 NEW (W/O RAILING POST)

1"=1'-0"

(ONE LOCATION ONLY SEE KEY PLAN)

LICENSED PROFESSIONAL ENGINEER B.I. ARCHIBALD PROVINCE OF ONTARIO

LICENSED PROFESSIONAL ENGINEER J.P. STEPHENSON PROVINCE OF ONTARIO

THE MINISTRY OF WORKS AND ENGINEERING

P.O. Box HM525 Hamilton HMCX Bermuda
Phone: (441)295-5151

DELCAN INTERNATIONAL Toronto Canada

GENERAL NOTES:

1. ALL DIMENSIONS TO BE VERIFIED IN THE FIELD BY THE CONTRACTOR.

ISSUED FOR: CONSTRUCTION

AMENDMENTS:

NO:	REVISION	APP	DATE:
1	AS-BUILT	J.C.	06/03/2001
0	ISSUE FOR CONSTRUCTION		31/03/2000

SCALE: AS SHOWN

SURVEY
PREPARED BY: N/A DATE:

DESIGN
PREPARED BY: B.I.A. DATE: 31/01/2000
CHECKED BY: J.P.S. DATE: 31/01/2000

DRAWING
PREPARED BY: A.B.M. DATE: 31/01/2000
CHECKED BY: B.I.A. DATE: 31/01/2000

APPROVED BY:

PROJECT NUMBER: 44/21/02

PROJECT NAME:

LONGBIRD BRIDGE REHABILITATION

DRAWING FILE NO: S6.DWG ACAD R-14

SHEET TITLE:

WALKWAY AND CONTROL HOUSE-1

SHEET NUMBER: S6 REVISION 1

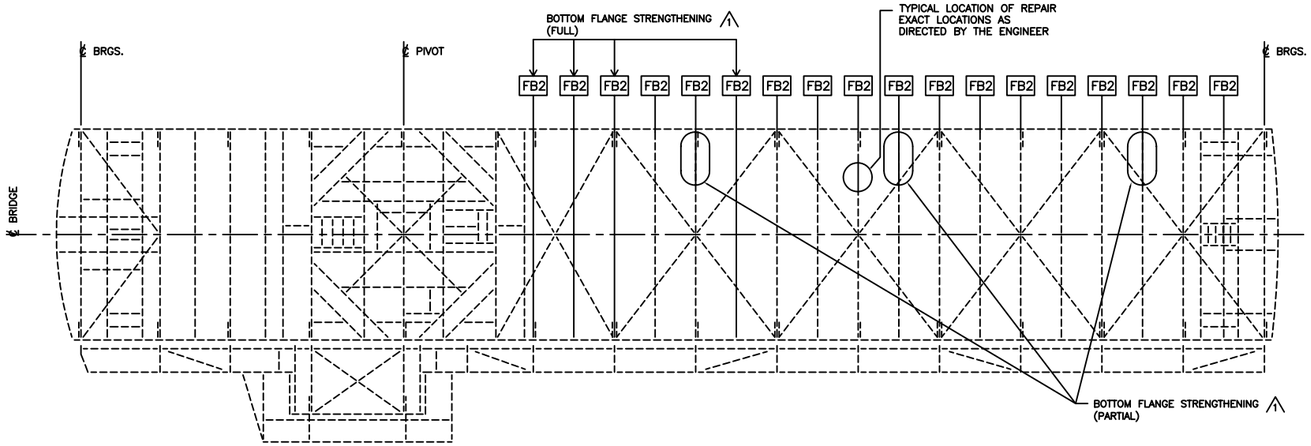

KEY PLAN
1/8" = 1'-0"

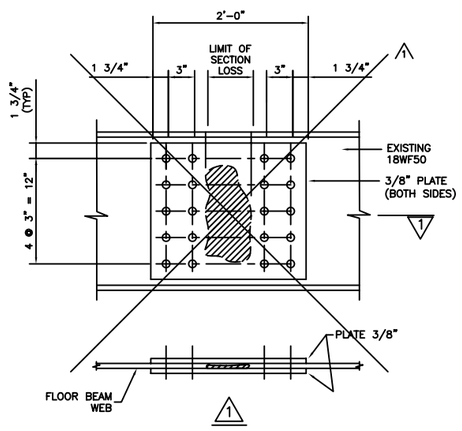

LOCAL WEB STRENGTHENING
1 1/2" = 1'-0"

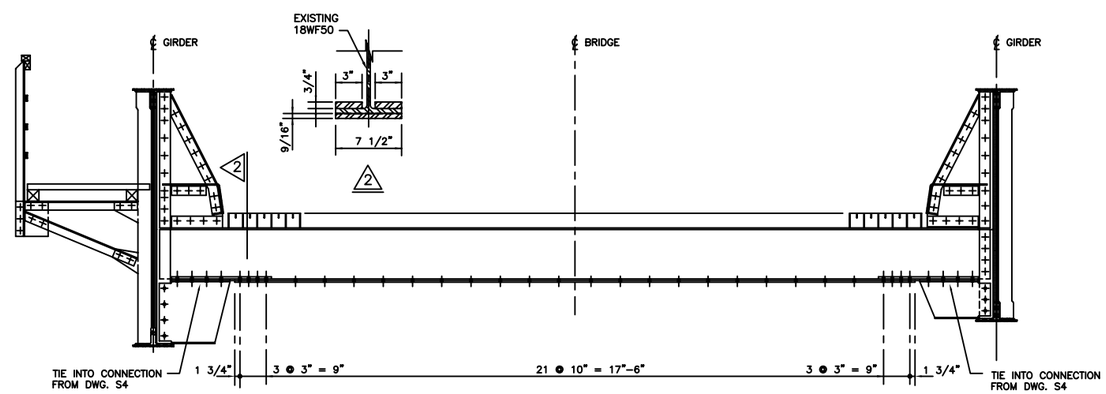

STRENGTHENING OF BOTTOM FLANGE (FULL)
1/2" = 1'-0"

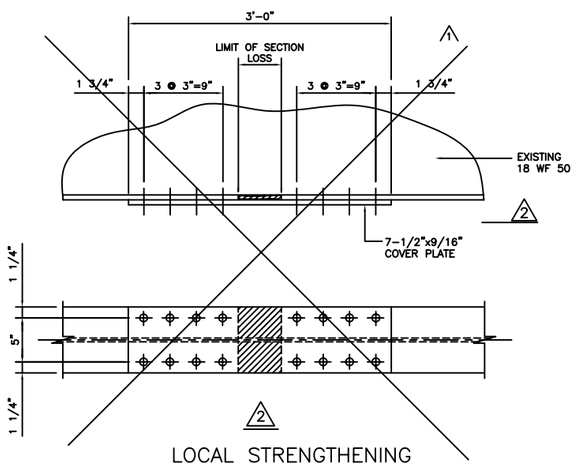

LOCAL STRENGTHENING BOTTOM FLANGE
1 1/2" = 1'-0"

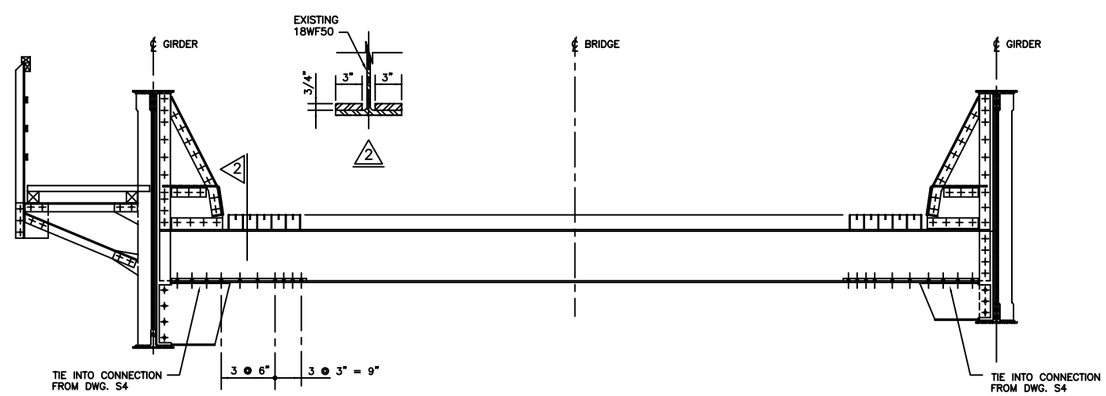

STRENGTHENING OF BOTTOM FLANGE (PARTIAL)
1/2" = 1'-0"

LEGEND

- INDICATES LOCATION OF NEW HOLE REQUIRED IN EXISTING AND/OR NEW STEEL. COMPONENTS TO BE FASTENED WITH NEW BOLT.
- INDICATES LOCATION OF EXISTING RIVET OR BOLT TO BE REMOVED AND REPLACED WITH NEW BOLT THROUGH EXISTING STEEL AND NEW CONNECTION STEEL.
- INDICATES LOCATION OF EXISTING RIVET OR BOLT TO REMAIN IN PLACE. (SHOWN FOR INFORMATION PURPOSES ONLY)

THE MINISTRY OF WORKS AND ENGINEERING

P.O. Box HM525 Hamilton HMCX Bermuda
Phone: (441)295-5151

DELCAN INTERNATIONAL
Toronto Canada

GENERAL NOTES:

1. ALL DIMENSIONS TO BE VERIFIED IN THE FIELD BY THE CONTRACTOR.

ISSUED FOR: CONSTRUCTION

AMENDMENTS:

NO:	REVISION	APP	DATE:
	AS-BUILT	J.C.	06/03/2001
0	ISSUE FOR CONSTRUCTION		31/03/20C

SCALE: AS SHOWN

SURVEY
PREPARED BY: N/A DATE:

DESIGN
PREPARED BY: B.I.A. DATE: 31/01/20
CHECKED BY: J.P.S. DATE: 31/01/20

DRAWING
PREPARED BY: A.B.M. DATE: 31/01/20
CHECKED BY: B.I.A. DATE: 31/01/20

APPROVED BY:

PROJECT NUMBER:
44/21/02

PROJECT NAME:
LONGBIRD BRIDGE REHABILITATION

DRAWING FILE NO: S5.DWG ACAD R-14

SHEET TITLE:
FLOOR BEAM STRENGTHENING (FB2)-

SHEET NUMBER: S5

REVISION 1

LICENSED PROFESSIONAL ENGINEER B.I. ARCHIBALD PROVINCE OF ONTARIO

LICENSED PROFESSIONAL ENGINEER J.P. STEPHENSON PROVINCE OF ONTARIO

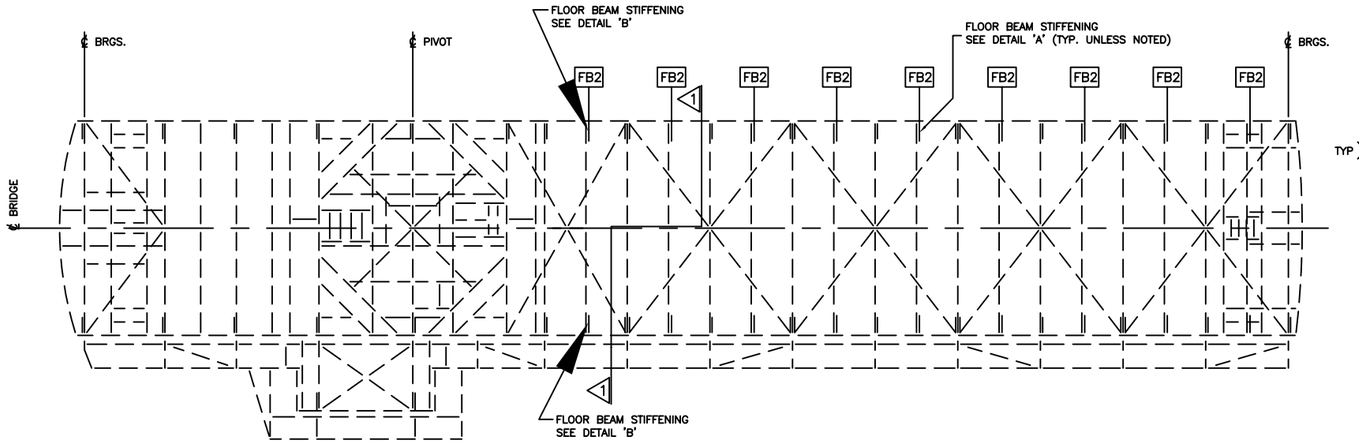

KEY PLAN
1/8" = 1'-0"

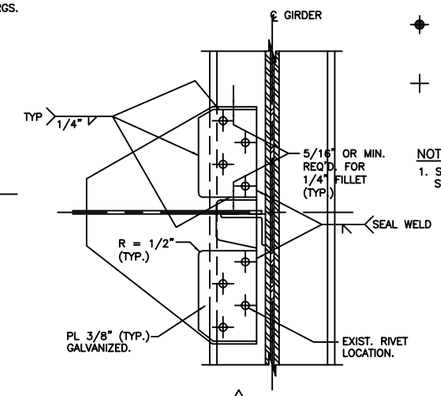

3
1 1/2"=1'-0"
(AT LOCATIONS WITH OVERSIZED HOLES IN LOWER FLANGE)
ON FB # 15 N/S & FB # 17 N/S ONLY

LEGEND

- INDICATES LOCATION OF NEW HOLE REQUIRED IN EXISTING AND/OR NEW STEEL. COMPONENTS TO BE FASTENED WITH NEW BOLT.
- INDICATES LOCATION OF EXISTING RIVET OR BOLT TO BE REMOVED AND REPLACED WITH NEW BOLT THROUGH EXISTING STEEL AND NEW CONNECTION STEEL
- INDICATES LOCATION OF EXISTING RIVET OR BOLT TO REMAIN IN PLACE. (SHOWN FOR INFORMATION PURPOSES ONLY)

NOTES:

1. SHIMS ARE PERMITTED TO PROVIDE PROPER FIT OF STIFFENING ASSEMBLY.

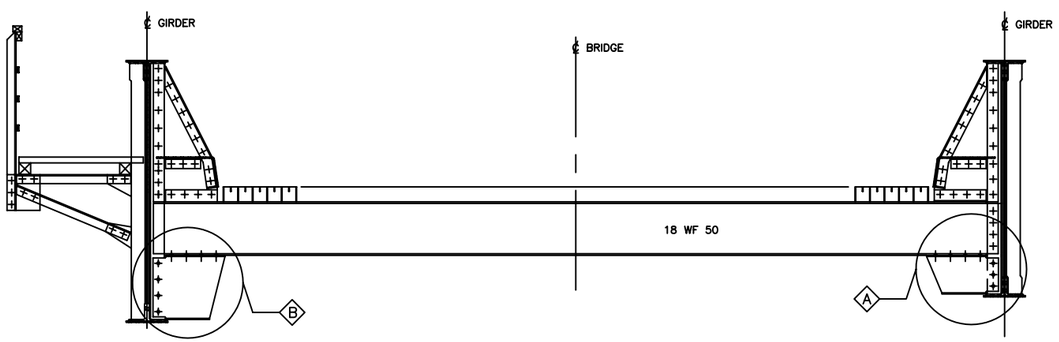

SECTION 1
1/2" = 1'-0"

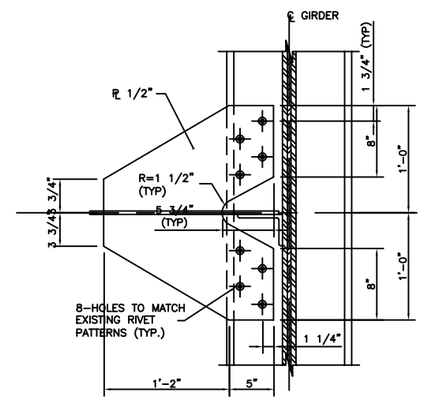

3
1 1/2"=1'-0"
(AT LOCATIONS WITH COVER PLATES ON EXISTING GIRDER FLANGE)

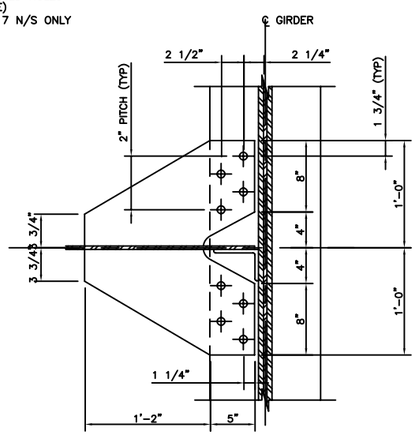

3
1 1/2"=1'-0"
(AT LOCATIONS WITHOUT COVER PLATES ON EXISTING GIRDER FLANGE)

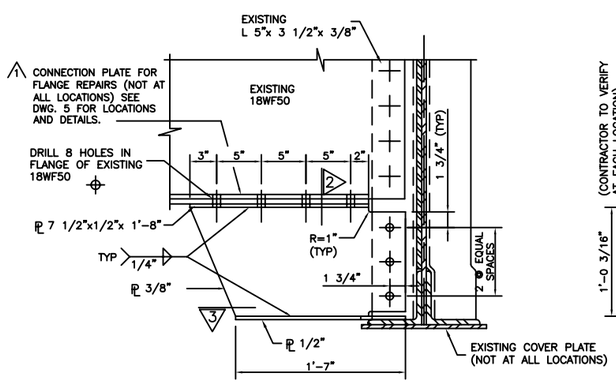

DETAIL 'A'
1 1/2"=1'-0"
OPPOSITE SIDE SIMILAR

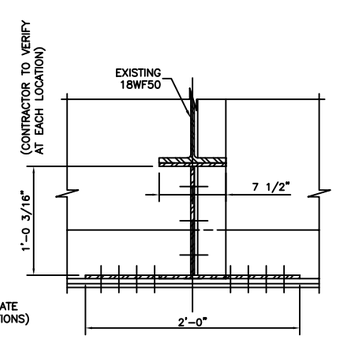

2
1 1/2"=1'-0"

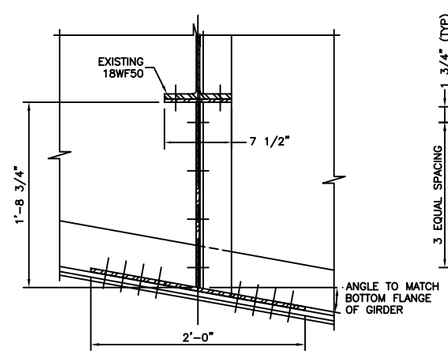

4
1 1/2"=1'-0"

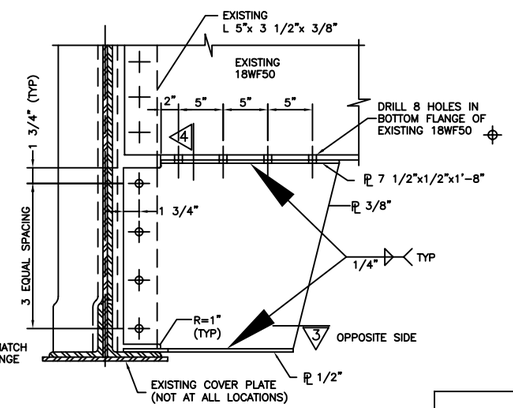

DETAIL 'B'
1 1/2"=1'-0"
OPPOSITE SIDE SIMILAR

LICENSED PROFESSIONAL ENGINEER
B.I. ARCHIBALD
PROVINCE OF ONTARIO

LICENSED PROFESSIONAL ENGINEER
J.P. STEPHENSON
PROVINCE OF ONTARIO

THE MINISTRY OF WORKS AND ENGINEERING

P.O. Box HM525 Hamilton HMCX Bermuda
Phone: (441)295-5151

DELCAN INTERNATIONAL
Toronto Canada

GENERAL NOTES:

1. ALL DIMENSIONS TO BE VERIFIED IN THE FIELD BY THE CONTRACTOR.

ISSUED FOR: CONSTRUCTION

AMENDMENTS:

NO:	REVISION	APP	DATE:
1	AS-BUILT	J.C.	06/03/2001
0	ISSUE FOR CONSTRUCTION		31/03/2000

SCALE: AS SHOWN

SURVEY
PREPARED BY: N/A
DATE:

DESIGN
PREPARED BY: B.I.A.
DATE: 31/01/2000
CHECKED BY: J.P.S.
DATE: 31/01/2000

DRAWING
PREPARED BY: A.B.M./K.R.S.
DATE: 31/01/2000
CHECKED BY: B.I.A.
DATE: 31/01/2000

APPROVED BY:

PROJECT NUMBER: 44/21/02

PROJECT NAME:
LONGBIRD BRIDGE REHABILITATION

DRAWING FILE NO: S4.DWG
ACAD R-14

SHEET TITLE:
FLOOR BEAM STRENGTHENING (FB2)-1

SHEET NUMBER: S4
REVISION 1

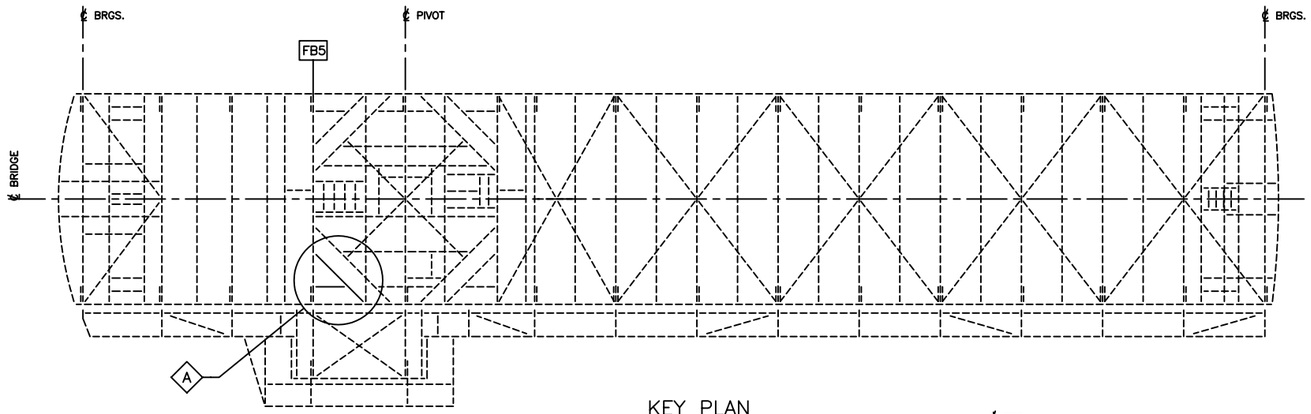

KEY PLAN
1/8" = 1'-0"

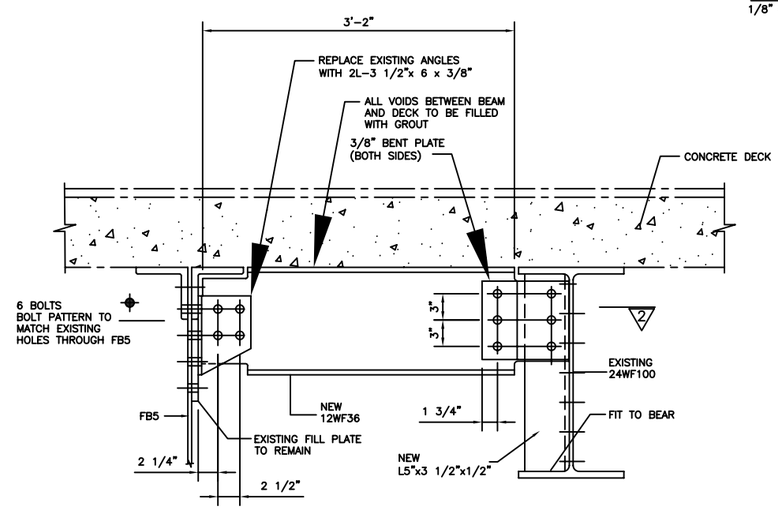

SECTION 1
1 1/2" = 1'-0"

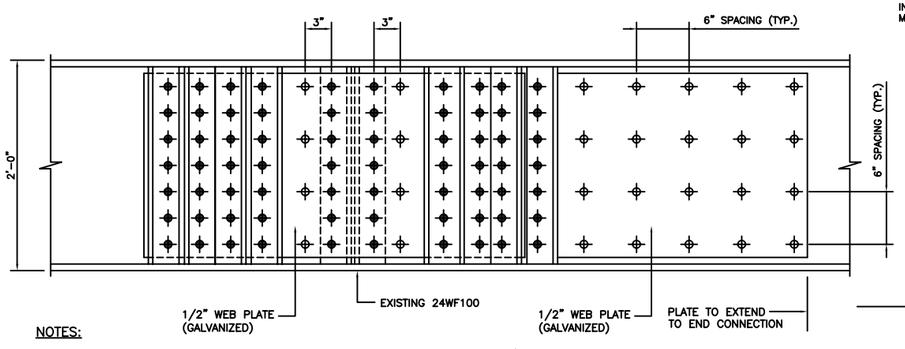

NOTES:

- EXACT LOCATION OF HOLES TO BE VERIFIED BY THE CONTRACTOR IN THE FIELD.
- PLATE LENGTHS TO BE CONFIRMED IN THE FIELD BASED ON LAYOUT SHOWN.
- CONTRACTOR TO PROVIDE METHOD OF JACKING GIRDER SO THAT STIFFENERS MAY BE REMOVED IN SEQUENCE CONTRARY TO DWG. S3

SECTION 2
1 1/2" = 1'-0"

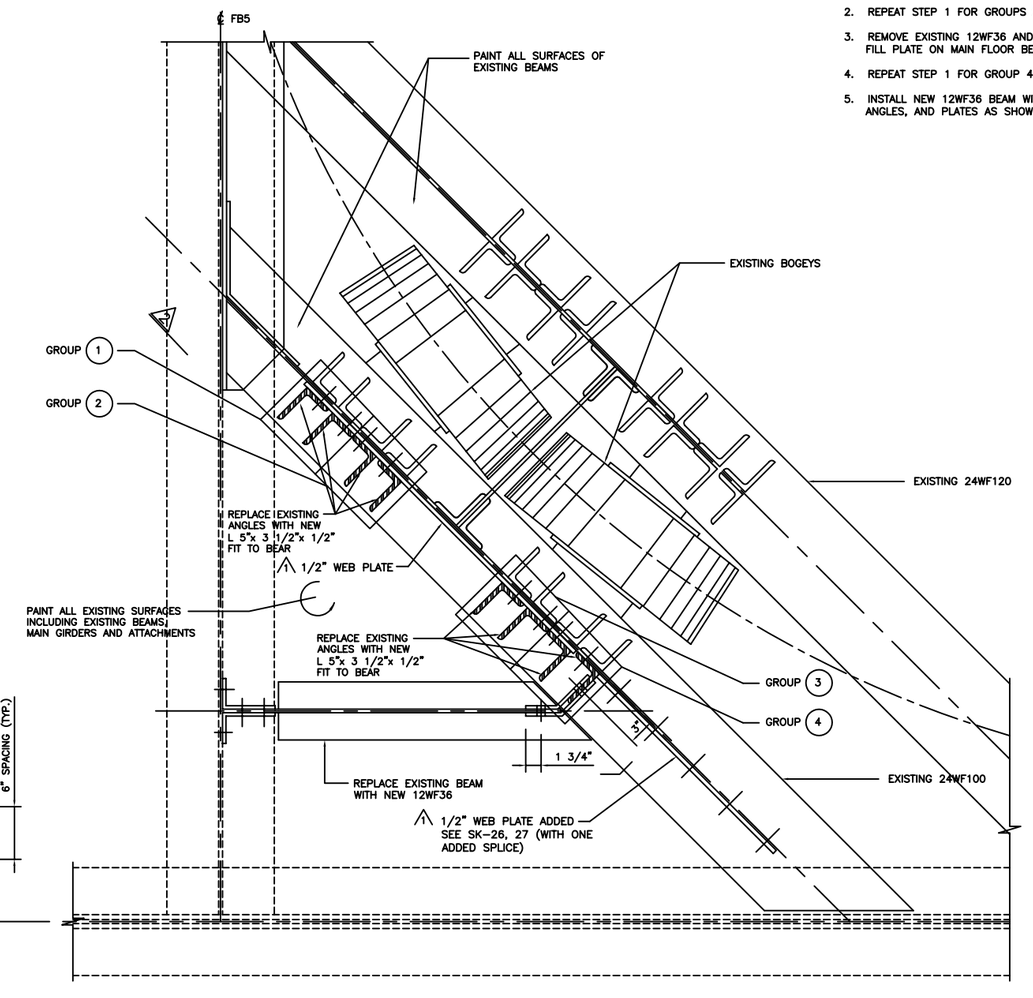

WEB STRENGTHENING
1 1/2" = 1'-0"

LEGEND

- INDICATES LOCATION OF NEW HOLE REQUIRED IN EXISTING AND/OR NEW STEEL. COMPONENTS TO BE FASTENED WITH NEW BOLT.
- INDICATES LOCATION OF EXISTING RIVET OR BOLT TO BE REMOVED AND REPLACED WITH NEW BOLT THROUGH EXISTING STEEL AND NEW CONNECTION STEEL
- INDICATES LOCATION OF EXISTING RIVET OR BOLT TO REMAIN IN PLACE. (SHOWN FOR INFORMATION PURPOSES ONLY)

NOTES:

ALL REPAIRS TO BE DONE WITH WESTBOUND LANE CLOSED TO TRAFFIC.

REPAIR PROCEDURE

1. REMOVE EXISTING RIVETS AND TWO STIFFENERS IN GROUP 1.
   REMOVE EXISTING PAINT, CLEAN SURFACE, APPLY NEW PAINT IN ACCORDANCE WITH SPECIFICATIONS.
   REPLACE WITH NEW BOLTS AND STIFFENERS AS SHOWN.
   BOLT PATTERN TO MATCH EXISTING.
2. REPEAT STEP 1 FOR GROUPS 2 AND 3.
3. REMOVE EXISTING 12WF36 AND CLIP ANGLES. FILL PLATE ON MAIN FLOOR BEAM TO REMAIN.
4. REPEAT STEP 1 FOR GROUP 4.
5. INSTALL NEW 12WF36 BEAM WITH NEW BOLTS, ANGLES, AND PLATES AS SHOWN.

THE MINISTRY OF WORKS AND ENGINEERING

P.O. Box HM525 Hamilton HMCX Bermuda
Phone: (441)295-5151

DELCAN INTERNATIONAL
Toronto Canada

GENERAL NOTES:

* ALL DIMENSIONS TO BE VERIFIED IN THE FIELD BY THE CONTRACTOR

ISSUED FOR: CONSTRUCTION

AMENDMENTS:

NO:	REVISION	APP	DATE:
2	AS BUILTS	J.C.	06/03/2001
1	WEB STRENGTHENING		
	ADDED PER SK-26, 27.	J.C.	03/03/2001
0	ISSUE FOR CONSTRUCTION		31/03/2000

SCALE: AS SHOWN

SURVEY
PREPARED BY: N/A DATE:

DESIGN
PREPARED BY: B.I.A. DATE: 31/01/2000
CHECKED BY: J.P.S. DATE: 31/01/2000

DRAWING
PREPARED BY: A.B.M. DATE: 31/01/2000
CHECKED BY: B.I.A. DATE: 31/01/2000

APPROVED BY:

PROJECT NUMBER: 44/21/02

PROJECT NAME:
LONGBIRD BRIDGE REHABILITATION

DRAWING FILE NO: S3.DWG ACAD R-14

SHEET TITLE:
BEAM REPAIR AT MAIN SUPPORT WHEELS

SHEET NUMBER: S3 REVISION 2

LICENSED PROFESSIONAL ENGINEER B.I. ARCHIBALD PROVINCE OF ONTARIO

LICENSED PROFESSIONAL ENGINEER J.P. STEPHENSON PROVINCE OF ONTARIO

FILE LOCATION-G:\DATA\B11000\B\CAD\LONGBIRD-REHAB\ASBUILTS\
DRAWING NAME: S3.DWG
REVISED BY: A.B.M. MODIFIED: 01/03/15 11:47:48
DATE PLOTTED: 02/07/09 11:47:33

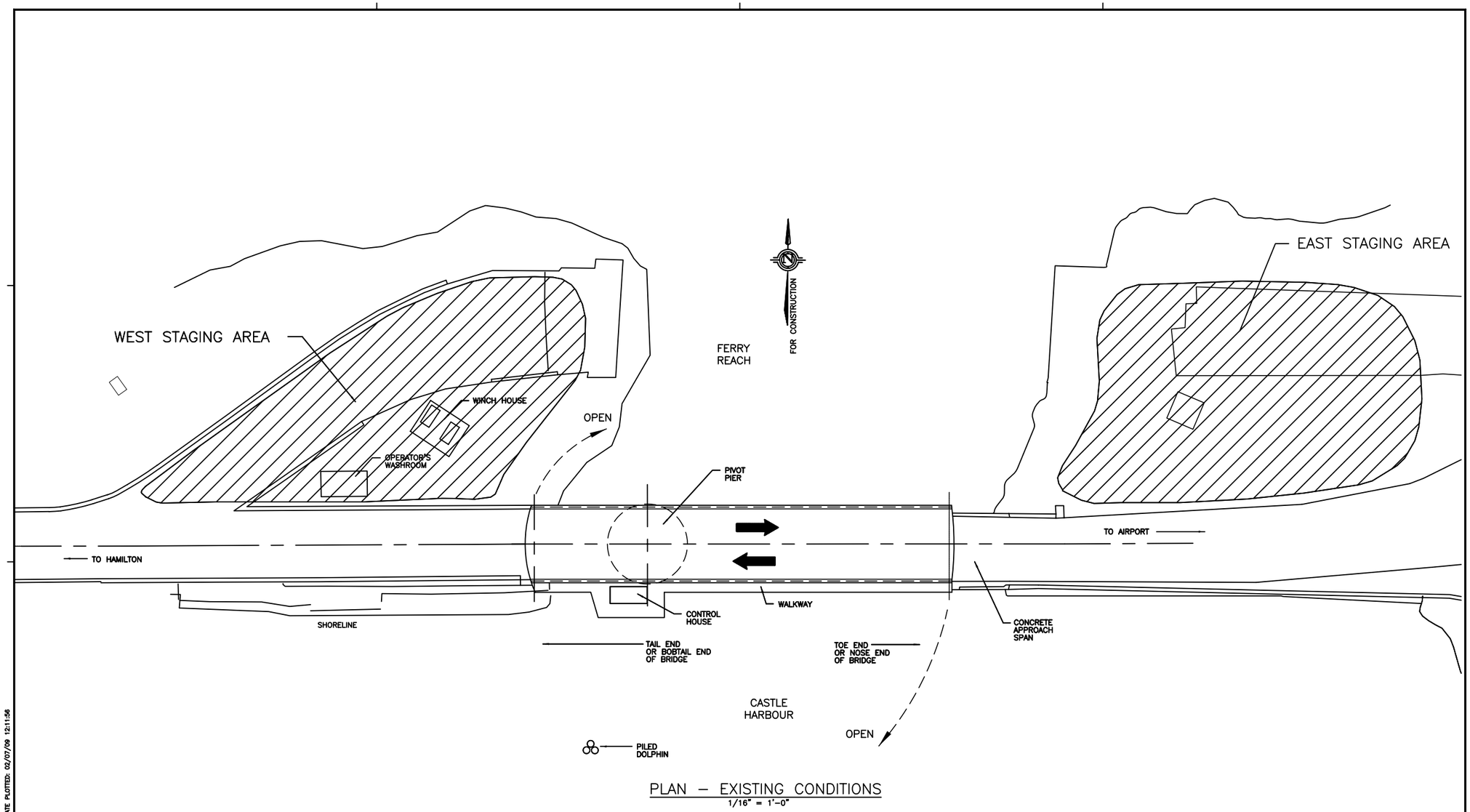

PLAN – EXISTING CONDITIONS
1/16" = 1'-0"

THE MINISTRY OF WORKS AND ENGINEERING

P.O. Box HM525 Hamilton HMCX Bermuda
Phone: (441)295-5151

DELCAN INTERNATIONAL
Toronto Canada

GENERAL NOTES:

ISSUED FOR: CONSTRUCTION

AMENDMENTS:

NO:	REVISION	APP	DATE:
1	AS-BUILT	J.C.	06/03/2001
0	ISSUE FOR CONSTRUCTION		31/03/2000

SCALE: AS SHOWN

SURVEY
PREPARED BY: N/A DATE:

DESIGN
PREPARED BY: J.M.C.. DATE: 31/01/2000
CHECKED BY: J.P.S. DATE: 31/01/2000

DRAWING
PREPARED BY: K.V.H DATE: 31/01/2000
CHECKED BY: J.M.C. DATE: 31/01/2000

APPROVED BY:

PROJECT NUMBER: 44/21/02

PROJECT NAME:
LONGBIRD BRIDGE REHABILITATION

DRAWING FILE NO: S2.DWG ACAD R-14

SHEET TITLE:
GENERAL ARRANGEMENT

SHEET NUMBER: S2 REVISION 1

LICENSED PROFESSIONAL ENGINEER J.M. CRABB PROVINCE OF ONTARIO

LICENSED PROFESSIONAL ENGINEER J.P. STEPHENSON PROVINCE OF ONTARIO

FILE LOCATION-D:\DATA\B1000\BR\CAD\LONGBIRD-REHAB\ASBUILTS\
DRAWING NAME: S2.DWG
REVISED BY: A.B.M.
MODIFIED: 01/03/07 11:19:46
DATE PLOTTED: 02/07/09 12:11:56

GENERAL NOTES :

1.0 GENERAL

1.1 THESE NOTES APPLY TO STRUCTURAL DRAWINGS S1 THROUGH S19.

1.2 ALL WORK IS TO BE DONE IN ACCORDANCE WITH THE MINISTRY OF WORKS & ENGINEERING STANDARD SPECIFICATIONS, DATED 1993, AS MODIFIED BY THE TECHNICAL SPECIFICATIONS.

1.3 UNLESS NOTED OTHERWISE THE CONTRACTOR SHALL SUPPLY ALL THE NECESSARY MATERIALS TO COMPLETE THE WORK.

1.4 DO NOT SCALE THE DRAWINGS. DIMENSIONS ARE TO BE USED AS A GUIDE ONLY. CONTRACTOR IS TO FIELD MEASURE FOR ALL HIS DIMENSIONAL REQUIREMENTS.

1.5 ALL DRAWINGS ARE TO BE READ IN CONJUNCTION WITH THE SPECIFICATIONS FOR THIS PACKAGE. WHERE A DISCREPANCY EXISTS BETWEEN THE DRAWINGS AND SPECIFICATIONS IT SHALL BE BROUGHT TO THE ENGINEER'S ATTENTION.

1.6 THE CONTRACTOR SHALL BE RESPONSIBLE FOR THE INTEGRITY AND STABILITY OF THE STRUCTURE DURING ALL STAGES OF REHABILITATION.

2.0 SCOPE OF WORK

2.1 THE SCOPE OF WORK ENTAILS THE STRENGTHENING AND REPAIR OF THE STRUCTURE;

- GENERAL STRENGTHENING AND REPAIR OF THE STRUCTURE.
- REPLACEMENT OF THE WALKWAYS AND CONTROL HOUSE.
- MODIFICATIONS OF THE STRUCTURE TO ACCOMMODATE A NEW HYDRAULIC MECHANICAL DRIVE SYSTEM.
- IMPROVE ACCESS TO THE PIVOT PIER.
- MISCELLANEOUS REPAIRS.

3.0 DESIGN CODES

3.1 STRUCTURAL STRENGTHENING AND REPAIRS HAVE BEEN DESIGNED IN ACCORDANCE WITH THE ONTARIO HIGHWAY BRIDGE DESIGN CODE (3rd. EDITION), AS MODIFIED BY THE BERMUDA EVALUATION / DESIGN VEHICLE LOAD REPORTS (DELCAN 1998 AND 1999).

3.2 PEDESTRIAN (LIVE) LOADING OF 3.6KPa HAS BEEN APPLIED FOR WALKWAY AND CONTROL HOUSE STRUCTURAL STEEL FRAMING, USING LIMIT STATES DESIGN.

3.3 MODIFICATIONS TO STRUCTURAL ELEMENTS DUE TO MECHANICAL EQUIPMENT, HAVE BEEN DESIGNED FOR MAXIMUM OPERATING LOADS OF SPECIFIED EQUIPMENT.

4.0 CONCRETE

4.1 ALL CONCRETE WORK IS TO BE IN ACCORDANCE WITH THE SPECIFICATIONS.

4.2 CONCRETE MIX DESIGNS SHALL BE SUBMITTED TO THE ENGINEER FOR APPROVAL.

4.3 CONCRETE MIXES TO BE DESIGNED ACCORDING TO SECTION 03300, OF THE SPECIFICATIONS.

4.4 CONCRETE STRENGTH AND SLUMP TO BE AS FOLLOWS: UNLESS OTHERWISE NOTED.

LOCATION	MIN. SPECIFIED 28 DAY STRENGTH	SLUMP
COUNTERWEIGHT, PIVOT PIER	30 MPa	3" +/- 1"

4.5 CONCRETE COVER TO REINFORCING STEEL TO BE AS FOLLOWS: UNLESS OTHERWISE NOTED.

LOCATION	CLEAR COVER
COUNTERWEIGHT	3" TO DOWELS
PIVOT PIER	3"

4.6 REINFORCING CHAIRS TO BE PLASTIC OR CONCRETE.

4.7 NO ADDITIVES TO BE USED WITHOUT THE PRIOR APPROVAL OF THE ENGINEER.

5.0 REINFORCING STEEL

5.1 REINFORCING STEEL TO HAVE A MINIMUM CHARACTERISTIC STRENGTH 400 MPa.

5.2 REINFORCING STEEL TO BE GALVANISED IN ACCORDANCE WITH PART 1.1, SECTION 03200 OF THE SPECIFICATIONS.

6.0 STRUCTURAL STEEL

6.1 STRUCTURAL STEEL SHALL BE IN ACCORDANCE WITH CAN/CSA G40.21-M GRADE 300W.

6.2 WELDING SHALL BE DONE IN ACCORDANCE WITH CSA W59.

6.3 ALL WELDING SHALL BE PERFORMED IN THE SHOP WITH NO FIELD WELDING. UNLESS NOTED OTHERWISE.

6.4 ALL BUTT WELDS IN FLANGE AND WEB SHOP SPLICES SHALL BE FINISHED FLUSH OR SMOOTH AS INDICATED BY GRINDING WHERE NECESSARY IN THE DIRECTION OF APPLIED STRESSES. IF RELOCATION OR ADDITIONAL SHOP SPLICES ARE REQUIRED, THEIR LOCATIONS SHALL BE APPROVED BY THE ENGINEER.

6.5 UNLESS OTHERWISE NOTED THE MINIMUM FILLET WELD SHALL BE AS FOLLOWS:

JOINTED MATERIAL MATERIAL OF THICKER PART (inches)	MINIMUM SIZE OF FILLET WELD (inches)
TO 1/2 INCLUSIVE	3/16
1/2 TO 3/4	1/4
3/4 TO 1-1/2	5/16
1-1/2 TO 2-3/8	3/8
2-3/8 TO 4-3/4	1/2

6.6 ALL STRUCTURAL STEEL MEMBERS SHALL BE HOT DIP GALVANIZED AS PER THE SPECIFICATIONS.

6.7 NON-DESTRUCTIVE TESTING
THE FOLLOWING TESTS SHALL BE CARRIED OUT BY AN INDEPENDENT TESTING ORGANIZATION APPROVED BY THE ENGINEER.

THE RESULTS OF ALL TESTS SHALL BE FORWARDED TO THE ENGINEER IN REPORT FORMAT. ALL COSTS ASSOCIATED WITH THESE TESTING PROCEDURES SHALL BE PAID BY THE CONTRACTOR AS NOTED IN THE SPECIFICATIONS.

REQUIRED ACCEPTANCE LEVELS:

WELD TYPE	ACCEPTANCE LEVEL
BUTT	QUALITY "A"
FILLET	QUALITY "B"

THE FOLLOWING TYPE AND FREQUENCY OF TESTS SHALL BE PERFORMED:

BUTT WELDS	ULTRASOUND	20%
FILLET WELDS	MAGNETIC PARTICLE TEST	10%

ALL WELDS SHALL BE VISUALLY INSPECTED.

6.8 ALL STEEL MEMBERS SHALL BE CLEARLY LABELLED IN ACCORDANCE WITH THE SHOP DRAWINGS, INCLUDING ASSOCIATED BOLTS, NUTS AND WASHERS.

6.9 PROVIDE AN EXCESS OF 5% OF NET REQUIREMENTS FOR EACH SIZE, LENGTH & TYPE OF BOLT WITH ASSOCIATED NUTS AND WASHERS.

6.10 THREADS OF STRUCTURAL BOLTS TO BE EXCLUDED FROM THE SHEAR PLANE(S) OF THE COMPONENTS WHICH THEY CONNECT.

6.11 BOLT DATA

MINIMUM BOLT PITCH TO BE 3", UNLESS NOTED OTHERWISE.

MINIMUM EDGE DISTANCE TO BE 1 3/4 " UNLESS NOTED OTHERWISE.

BOLT HOLES TO BE PLACED ON STANDARD GAUGES FOR ANGLES, CHANNELS AND BEAMS UNLESS NOTED OTHERWISE.

ALL BOLTS TO BE 7/8 " DIA., 15/16 " DIA. HOLES EXCEPT FOR HOUSE AND SIDEWALK CONNECTIONS WHICH SHALL BE 3/4 " DIA. BOLTS, 13/16 " DIA. HOLES.

ALL BOLTS TO BE A325 TYPE 1 HOT DIP GALVANIZED.

7.0 STRUCTURAL STEEL PAINTING

7.1 STRUCTURAL STEEL PAINTING SHALL BE DONE IN ACCORDANCE WITH THE SPECIFICATIONS.

7.2 ALL EXISTING STEEL SURFACES AGAINST WHICH NEW OR REFURBISHED STEEL COMPONENTS SHALL BE PLACED, SHALL BE PREPARED AND PAINTED IN ACCORDANCE WITH THE SPECIFICATIONS, PRIOR TO THE INSTALLATION OF CONTACTING COMPONENTS.

8.0 TIMBER

8.1 NEW TIMBER TO BE TYPE PS 20 GRADED IN ACCORDANCE WITH NLGA GRADING RULES, AND TO BE TYPE "STRUCTURAL LIGHT FRAMING, No. 2", SOUTHERN YELLOW PINE (PITCH PINE).

8.2 ALL TIMBER TO BE WOLMANISED TYPE PRESSURE TREATED.

8.3 ALL FASTENERS (BOLTS, NUTS, WASHERS, NAILS) FOR TIMBER TO BE STAINLESS STEEL TYPE 316.

9.0 INSPECTION AND TESTING

9.1 CONTRACTOR TO PROVIDE 24 HOUR NOTICE FOR THE INSPECTION OF ALL REINFORCING, PRIOR TO PLACING CONCRETE.

9.2 CONCRETE TO BE TESTED BASED ON SPECIFICATION REQUIREMENTS. TESTING TO BE DONE BY SUPPLIER.

10 SHOP DRAWINGS AND SUBMITTALS

10.1 REVIEW OF THE DRAWINGS BY THE ENGINEER IS TO VERIFY GENERAL CONFORMANCE WITH THE DESIGN DETAILS AND DOES NOT COVER APPROVAL OF DETAILED DESIGNS, DIMENSIONS, AND CONNECTIONS. FURTHER, THIS REVIEW DOES NOT RELIEVE THE CONTRACTOR OF THE RESPONSIBILITY FOR ENSURING THAT THE WORK IS CARRIED OUT IN ACCORDANCE WITH THE STRUCTURAL DRAWINGS.

10.2 SHOP DRAWINGS ARE TO BE PREPARED FOR ALL REINFORCING INCLUDING BAR BENDING SCHEDULES.

10.3 SHOP DRAWINGS ARE TO BE PREPARED FOR STRUCTURAL STEEL SHOWING ALL MEMBER SIZES, CONNECTION DETAILS. DIMENSIONED SHOP DRAWINGS TO BE PREPARED UNDER THE DIRECTION OF A REGISTERED PROFESSIONAL ENGINEER. DIMENSIONS ON SHOP DRAWINGS TO BE DERIVED FROM FIELD MEASUREMENT OF COMPONENTS.

10.4 THE CONTRACTOR SHALL ALLOW 10 WORKING DAYS FOR REVIEW OF SHOP DRAWINGS.

LICENSED PROFESSIONAL ENGINEER J.M. CRABB PROVINCE OF ONTARIO

LICENSED PROFESSIONAL ENGINEER J.P. STEPHENSON PROVINCE OF ONTARIO

THE MINISTRY OF WORKS AND ENGINEERING

P.O. Box HM525 Hamilton HMCX Bermuda
Phone: (441)295-5151

DELCAN INTERNATIONAL
Toronto Canada

GENERAL NOTES:

ISSUED FOR: CONSTRUCTION

AMENDMENTS:

NO:	REVISION	APP	DATE:
1	AS-BUILT	J.C.	06/03/2001
0	ISSUE FOR CONSTRUCTION		31/03/2000

SCALE: AS SHOWN

SURVEY
PREPARED BY: N/A DATE:

DESIGN
PREPARED BY: J.M.C. DATE: 31/01/2000
CHECKED BY: J.P.S. DATE: 31/01/2000

DRAWING
PREPARED BY: K.V.H. DATE: 31/01/2000
CHECKED BY: J.M.C. DATE: 31/01/2000

APPROVED BY:

PROJECT NUMBER: 44/21/02

PROJECT NAME:
LONGBIRD BRIDGE REHABILITATION

DRAWING FILE NO: S1.DWG ACAD R-14

SHEET TITLE:
SCOPE OF WORKS & GENERAL NOTES

SHEET NUMBER: S1 REVISION 1

FILE LOCATION-G:\DATA\B11000\B\CAD\LONGBIRD-REHAB\ASBUILTS\
DRAWING NAME: S1.DWG
REVISED BY: K.V.H. MODIFIED: 01/03/07 11:18:17 DATE PLOTTED: 02/07/09 11:45:58

GENERAL NOTES :

1.0 GENERAL

1.1 THESE NOTES APPLY TO STRUCTURAL DRAWINGS S1 THROUGH S19.

1.2 ALL WORK IS TO BE DONE IN ACCORDANCE WITH THE MINISTRY OF WORKS & ENGINEERING STANDARD SPECIFICATIONS, DATED 1993, AS MODIFIED BY THE TECHNICAL SPECIFICATIONS.

1.3 UNLESS NOTED OTHERWISE THE CONTRACTOR SHALL SUPPLY ALL THE NECESSARY MATERIALS TO COMPLETE THE WORK.

1.4 DO NOT SCALE THE DRAWINGS. DIMENSIONS ARE TO BE USED AS A GUIDE ONLY. CONTRACTOR IS TO FIELD MEASURE FOR ALL HIS DIMENSIONAL REQUIREMENTS.

1.5 ALL DRAWINGS ARE TO BE READ IN CONJUNCTION WITH THE SPECIFICATIONS FOR THIS PACKAGE. WHERE A DISCREPANCY EXISTS BETWEEN THE DRAWINGS AND SPECIFICATIONS IT SHALL BE BROUGHT TO THE ENGINEER'S ATTENTION.

1.6 THE CONTRACTOR SHALL BE RESPONSIBLE FOR THE INTEGRITY AND STABILITY OF THE STRUCTURE DURING ALL STAGES OF REHABILITATION.

2.0 SCOPE OF WORK

2.1 THE SCOPE OF WORK ENTAILS THE STRENGTHENING AND REPAIR OF THE STRUCTURE;
- GENERAL STRENGTHENING AND REPAIR OF THE STRUCTURE.
- REPLACEMENT OF THE WALKWAYS AND CONTROL HOUSE.
- MODIFICATIONS OF THE STRUCTURE TO ACCOMMODATE A NEW HYDRAULIC MECHANICAL DRIVE SYSTEM.
- IMPROVE ACCESS TO THE PIVOT PIER.
- MISCELLANEOUS REPAIRS.

3.0 DESIGN CODES

3.1 STRUCTURAL STRENGTHENING AND REPAIRS HAVE BEEN DESIGNED IN ACCORDANCE WITH THE ONTARIO HIGHWAY BRIDGE DESIGN CODE (3rd. EDITION), AS MODIFIED BY THE BERMUDA EVALUATION / DESIGN VEHICLE LOAD REPORTS (DELCAN 1998 AND 1999).

3.2 PEDESTRIAN (LIVE) LOADING OF 3.6KPa HAS BEEN APPLIED FOR WALKWAY AND CONTROL HOUSE STRUCTURAL STEEL FRAMING, USING LIMIT STATES DESIGN.

3.3 MODIFICATIONS TO STRUCTURAL ELEMENTS DUE TO MECHANICAL EQUIPMENT, HAVE BEEN DESIGNED FOR MAXIMUM OPERATING LOADS OF SPECIFIED EQUIPMENT.

4.0 CONCRETE

4.1 ALL CONCRETE WORK IS TO BE IN ACCORDANCE WITH THE SPECIFICATIONS.

4.2 CONCRETE MIX DESIGNS SHALL BE SUBMITTED TO THE ENGINEER FOR APPROVAL.

4.3 CONCRETE MIXES TO BE DESIGNED ACCORDING TO SECTION 03300, OF THE SPECIFICATIONS.

4.4 CONCRETE STRENGTH AND SLUMP TO BE AS FOLLOWS: UNLESS OTHERWISE NOTED.

LOCATION	MIN. SPECIFIED 28 DAY STRENGTH	SLUMP
COUNTERWEIGHT, PIVOT PIER	30 MPa	3" +/- 1"

4.5 CONCRETE COVER TO REINFORCING STEEL TO BE AS FOLLOWS: UNLESS OTHERWISE NOTED.

LOCATION	CLEAR COVER
COUNTERWEIGHT	3" TO DOWELS
PIVOT PIER	3"

4.6 REINFORCING CHAIRS TO BE PLASTIC OR CONCRETE.

4.7 NO ADDITIVES TO BE USED WITHOUT THE PRIOR APPROVAL OF THE ENGINEER.

5.0 REINFORCING STEEL

5.1 REINFORCING STEEL TO HAVE A MINIMUM CHARACTERISTIC STRENGTH 400 MPa.

5.2 REINFORCING STEEL TO BE GALVANISED IN ACCORDANCE WITH PART 1.1, SECTION 03200 OF THE SPECIFICATIONS.

6.0 STRUCTURAL STEEL

6.1 STRUCTURAL STEEL SHALL BE IN ACCORDANCE WITH CAN/CSA G40.21-M GRADE 300W.

6.2 WELDING SHALL BE DONE IN ACCORDANCE WITH CSA W59.

6.3 ALL WELDING SHALL BE PERFORMED IN THE SHOP WITH NO FIELD WELDING. UNLESS NOTED OTHERWISE.

6.4 ALL BUTT WELDS IN FLANGE AND WEB SHOP SPLICES SHALL BE FINISHED FLUSH OR SMOOTH AS INDICATED BY GRINDING WHERE NECESSARY IN THE DIRECTION OF APPLIED STRESSES. IF RELOCATION OR ADDITIONAL SHOP SPLICES ARE REQUIRED, THEIR LOCATIONS SHALL BE APPROVED BY THE ENGINEER.

6.5 UNLESS OTHERWISE NOTED THE MINIMUM FILLET WELD SHALL BE AS FOLLOWS:

JOINTED MATERIAL MATERIAL OF THICKER PART (inches)	MINIMUM SIZE OF FILLET WELD (inches)
TO 1/2 INCLUSIVE	3/16
1/2 TO 3/4	1/4
3/4 TO 1-1/2	5/16
1-1/2 TO 2-3/8	3/8
2-3/8 TO 4-3/4	1/2

6.6 ALL STRUCTURAL STEEL MEMBERS SHALL BE HOT DIP GALVANIZED AS PER THE SPECIFICATIONS.

6.7 NON-DESTRUCTIVE TESTING
THE FOLLOWING TESTS SHALL BE CARRIED OUT BY AN INDEPENDENT TESTING ORGANIZATION APPROVED BY THE ENGINEER.

THE RESULTS OF ALL TESTS SHALL BE FORWARDED TO THE ENGINEER IN REPORT FORMAT. ALL COSTS ASSOCIATED WITH THESE TESTING PROCEDURES SHALL BE PAID BY THE CONTRACTOR AS NOTED IN THE SPECIFICATIONS.

REQUIRED ACCEPTANCE LEVELS:

WELD TYPE	ACCEPTANCE LEVEL
BUTT	QUALITY "A"
FILLET	QUALITY "B"

THE FOLLOWING TYPE AND FREQUENCY OF TESTS SHALL BE PERFORMED:

BUTT WELDS	ULTRASOUND	20%
FILLET WELDS	MAGNETIC PARTICLE TEST	10%

ALL WELDS SHALL BE VISUALLY INSPECTED.

6.8 ALL STEEL MEMBERS SHALL BE CLEARLY LABELLED IN ACCORDANCE WITH THE SHOP DRAWINGS, INCLUDING ASSOCIATED BOLTS, NUTS AND WASHERS.

6.9 PROVIDE AN EXCESS OF 5% OF NET REQUIREMENTS FOR EACH SIZE, LENGTH & TYPE OF BOLT WITH ASSOCIATED NUTS AND WASHERS.

6.10 THREADS OF STRUCTURAL BOLTS TO BE EXCLUDED FROM THE SHEAR PLANE(S) OF THE COMPONENTS WHICH THEY CONNECT.

6.11 BOLT DATA

MINIMUM BOLT PITCH TO BE 3", UNLESS NOTED OTHERWISE.

MINIMUM EDGE DISTANCE TO BE 1 3/4 " UNLESS NOTED OTHERWISE.

BOLT HOLES TO BE PLACED ON STANDARD GAUGES FOR ANGLES, CHANNELS AND BEAMS UNLESS NOTED OTHERWISE.

ALL BOLTS TO BE 7/8 " DIA., 15/16 " DIA. HOLES EXCEPT FOR HOUSE AND SIDEWALK CONNECTIONS WHICH SHALL BE 3/4 " DIA. BOLTS, 13/16 " DIA. HOLES.

ALL BOLTS TO BE A325 TYPE 1 HOT DIP GALVANIZED.

7.0 STRUCTURAL STEEL PAINTING

7.1 STRUCTURAL STEEL PAINTING SHALL BE DONE IN ACCORDANCE WITH THE SPECIFICATIONS.

7.2 ALL EXISTING STEEL SURFACES AGAINST WHICH NEW OR REFURBISHED STEEL COMPONENTS SHALL BE PLACED, SHALL BE PREPARED AND PAINTED IN ACCORDANCE WITH THE SPECIFICATIONS, PRIOR TO THE INSTALLATION OF CONTACTING COMPONENTS.

8.0 TIMBER

8.1 NEW TIMBER TO BE TYPE PS 20 GRADED IN ACCORDANCE WITH NLGA GRADING RULES, AND TO BE TYPE "STRUCTURAL LIGHT FRAMING, No. 2", SOUTHERN YELLOW PINE (PITCH PINE).

8.2 ALL TIMBER TO BE WOLMANISED TYPE PRESSURE TREATED.

8.3 ALL FASTENERS (BOLTS, NUTS, WASHERS, NAILS) FOR TIMBER TO BE STAINLESS STEEL TYPE 316.

9.0 INSPECTION AND TESTING

9.1 CONTRACTOR TO PROVIDE 24 HOUR NOTICE FOR THE INSPECTION OF ALL REINFORCING, PRIOR TO PLACING CONCRETE.

9.2 CONCRETE TO BE TESTED BASED ON SPECIFICATION REQUIREMENTS. TESTING TO BE DONE BY SUPPLIER.

10 SHOP DRAWINGS AND SUBMITTALS

10.1 REVIEW OF THE DRAWINGS BY THE ENGINEER IS TO VERIFY GENERAL CONFORMANCE WITH THE DESIGN DETAILS AND DOES NOT COVER APPROVAL OF DETAILED DESIGNS, DIMENSIONS, AND CONNECTIONS. FURTHER, THIS REVIEW DOES NOT RELIEVE THE CONTRACTOR OF THE RESPONSIBILITY FOR ENSURING THAT THE WORK IS CARRIED OUT IN ACCORDANCE WITH THE STRUCTURAL DRAWINGS.

10.2 SHOP DRAWINGS ARE TO BE PREPARED FOR ALL REINFORCING INCLUDING BAR BENDING SCHEDULES.

10.3 SHOP DRAWINGS ARE TO BE PREPARED FOR STRUCTURAL STEEL SHOWING ALL MEMBER SIZES, CONNECTION DETAILS. DIMENSIONED SHOP DRAWINGS TO BE PREPARED UNDER THE DIRECTION OF A REGISTERED PROFESSIONAL ENGINEER. DIMENSIONS ON SHOP DRAWINGS TO BE DERIVED FROM FIELD MEASUREMENT OF COMPONENTS.

10.4 THE CONTRACTOR SHALL ALLOW 10 WORKING DAYS FOR REVIEW OF SHOP DRAWINGS.

LICENSED PROFESSIONAL ENGINEER J.M. CRABB PROVINCE OF ONTARIO

LICENSED PROFESSIONAL ENGINEER J.P. STEPHENSON PROVINCE OF ONTARIO

THE MINISTRY OF WORKS AND ENGINEERING

P.O. Box HM585 Hamilton HMCX Bermuda
Phone: (441)295-5151

DELCAN INTERNATIONAL Toronto Canada

GENERAL NOTES:

ISSUED FOR: CONSTRUCTION

AMENDMENTS:

NO:	REVISION	APP	DATE:
1	AS-BUILT	J.C.	08/03/2001
0	ISSUE FOR CONSTRUCTION		31/03/2000

SCALE: AS SHOWN

SURVEY
PREPARED BY: N/A DATE:

DESIGN
PREPARED BY: J.M.C. DATE: 31/01/2000
CHECKED BY: J.P.S. DATE: 31/01/2000

DRAWING
PREPARED BY: K.V.H. DATE: 31/01/2000
CHECKED BY: J.M.C. DATE: 31/01/2000

APPROVED BY:

PROJECT NUMBER: 44/21/02

PROJECT NAME:
LONGBIRD BRIDGE REHABILITATION

DRAWING FILE NO: S1.DWG ACAD R-14

SHEET TITLE:
SCOPE OF WORKS & GENERAL NOTES

SHEET NUMBER: S1 REVISION 1

FILE LOCATION=G:\WORK\B1000\B\CAD\LONGBIRD-REHAB\#B8LB3S\
DRAWING NAME: S1.DWG
REVISED BY: K.V.H. MODIFIED: 01/03/07 11:15:17
DATE PLOTTED: 02/07/09 11:45:58

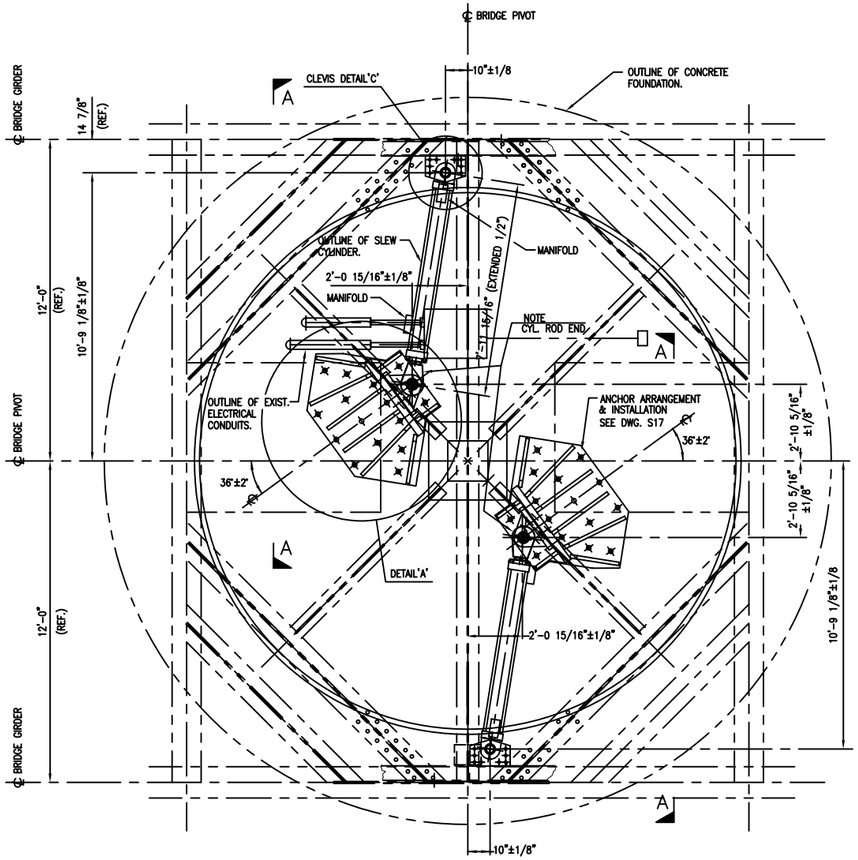

PLAN 'A' : SLEW CYLINDER INSTALLATION

SCALE : 3/8"=1'-0"

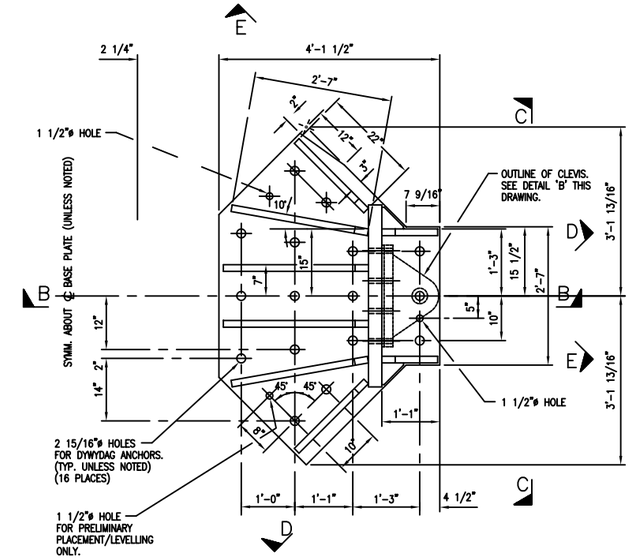

DETAIL 'A'

SCALE : 3/4"=1'-0"

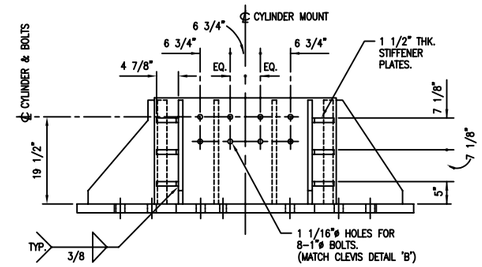

SECTION C-C

SCALE : 3/4"=1'-0"

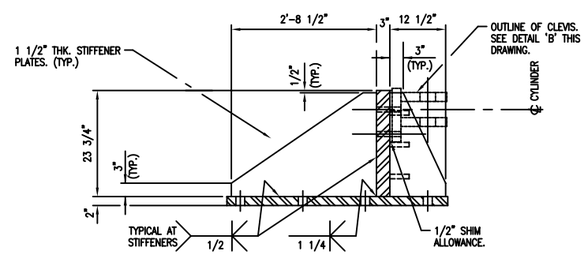

SECTION B-B

SCALE : 3/4"=1'-0"

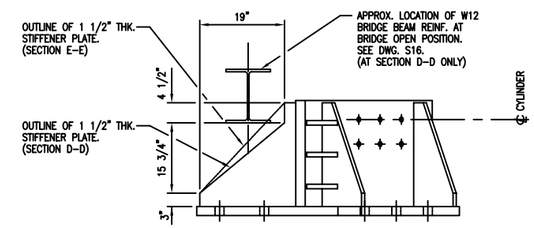

SECTION D-D (AS SHOWN)

SECTION E-E (OPPOSITE HAND)

SCALE : 3/4"=1'-0"

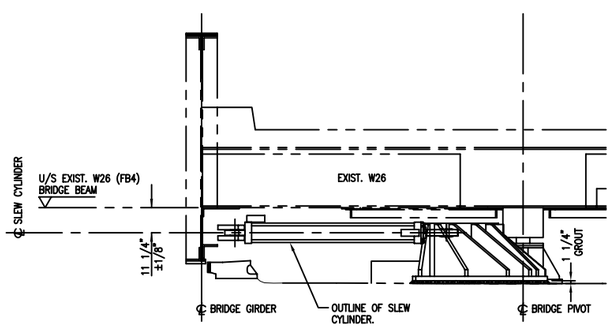

SECTION A-A

SCALE : 3/8"=1'-0"

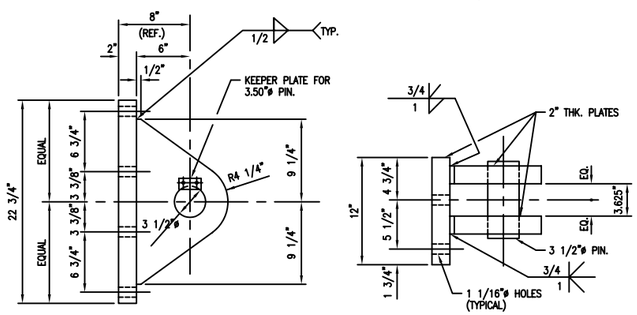

PLAN

ELEVATION

CLEVIS DETAIL 'B'

SCALE : 1 1/2"=1'-0"

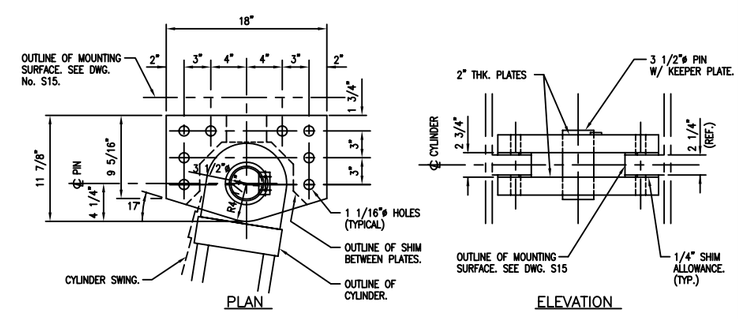

PLAN

ELEVATION

CLEVIS DETAIL 'C'

SCALE : 1 1/2"=1'-0"

INSTALLATION NOTES:

-3 ONLY 1 1/2ø HOLES PROVIDED 1 FOR "ø ANCHORS CINCH ANCHORS TO FACILITATE POSITIONING AND LEVELING OF PIVOT PIER CYLINDER SUPPORTS

-POSITION PIVOT PIER CYLINDER SUPPORTS WITHIN TOLERANCES NOTED, USE SUPPORT AS TEMPLATE FOR POSITIONING OF DYWYDAG ANCHORS

-DRILL FOR DYWYDAG ANCHORS (DWG. S17) PRIOR TO COMPLETING FINAL INSTALLATION. (BASE MUST BE MOVED TO DRILL HOLES)

-ADJUST ELEVATION AS REQUIRED TO SUIT ELEVATION OF BRIDGE CONNECTIONS.

-INSTALL CYLINDER WITHIN +/-1/8" OF LEVEL.

-CYLINDER SHOULD NOT BOTTOM OUT EITHER WHEN BRIDGE OPEN OR CLOSED NOMINAL 1/2" ADDITIONAL STROKE AT BOTH ENDS.

-ONCE POSITIONED, INSTALL DYWYDAG ANCHORS AND GROUT PER DWG. S17

REMOVALS NOTES:

-REVIEW NEW INSTALLATION PRIOR TO STARTING REMOVALS

-REFER TO DWG. 11-06-01, SHT. 7 OF 14

-REMOVE COMPLETE EXISTING DRIVE SYSTEM COMPONENTS INCLUDING 20 HP MOTOR, EARLE GEARBOX, BEVEL AND PINION SHAFT ASSEMBLIES, BRAKE UNITS, ALL ASSOCIATED SHAFTS AND COUPLINGS.

-TURN ALL EQUIPMENT OVER TO OWNER

-REMOVE ASSOCIATED SUPPORT STEEL FOR DRIVE SYSTEM. VERIFY EXTENT OF REMOVAL W/ ENGINEER PRIOR TO REMOVAL

-DO NOT REMOVE WHEEL TRACK OR INTEGRAL GEAR RACK

THE MINISTRY OF WORKS AND ENGINEERING

P.O. Box HM525 Hamilton HMCX Bermuda
Phone: (441)295-5151

DELCAN INTERNATIONAL
Toronto Canada

M.R. Byrne & Associates Limited
Consulting Professional Engineers
Burlington, Ont., Canada

GENERAL NOTES:

ALL DIMENSIONS TO BE VERIFIED IN THE THE FIELD BY THE CONTRACTOR.

ISSUED FOR: TENDER 18/02/00

AMENDMENTS:

NO:	REVISION	APP	DATE:
0	ISSUED FOR TENDER		18/02/00

SCALE: AS SHOWN

SURVEY
PREPARED BY: N/A DATE:

DESIGN
PREPARED BY: LHVB DATE: 31/01/00
CHECKED BY: LHVB DATE: 31/01/00

DRAWING
PREPARED BY: JSM DATE: 31/01/00
CHECKED BY: LHVB DATE: 31/01/00

APPROVED BY: LHVB

PROJECT NUMBER: 44/21/02

PROJECT NAME:
LONGBIRD BRIDGE REHABILITATION

DRAWING FILE NO: M2.dwg ACAD R-14

SHEET TITLE:
SLEW DRIVE ASSEMBLY & DETAILS

SHEET NUMBER: M2 REVISION 0

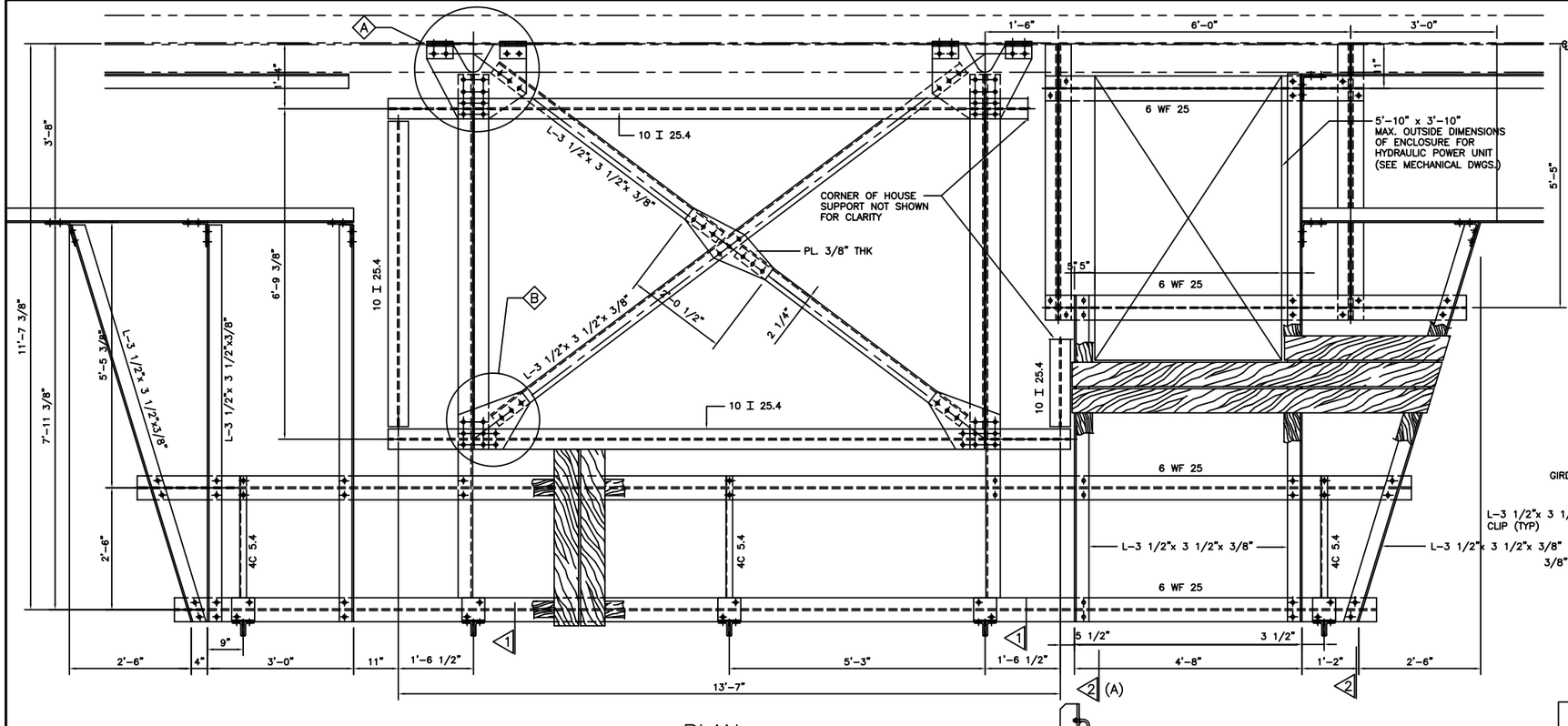

PLAN
3/4"=1'-0"

LEGEND

- INDICATES LOCATION OF NEW HOLE REQUIRED IN EXISTING AND/OR NEW STEEL. COMPONENTS TO BE FASTENED WITH NEW BOLT.
- INDICATES LOCATION OF EXISTING RIVET OR BOLT TO BE REMOVED AND REPLACED WITH NEW BOLT THROUGH EXISTING STEEL AND NEW CONNECTION STEEL
- INDICATES LOCATION OF EXISTING RIVET OR BOLT TO REMAIN IN PLACE. (SHOWN FOR INFORMATION PURPOSES ONLY)

NOTES:

1. THIS DRAWING TO BE READ IN CONJUNCTION WITH DWG'S S6, S7 AND S9.
2. ALL EXISTING HOUSE SUPPORTS AND RELATED FRAMING TO BE REMOVED BY THE CONTRACTOR.
3. TIMBER PLANKING TO SPAN BETWEEN 4"x4" TIMBER SUPPORTS.
4. ALL TIMBER TO BE ANCHORED AS SHOWN ON DWG. S7.
5. SOME FINAL DIMENSIONS MAY VARY FROM THOSE SHOWN. SEE R-CO SHOP DRAWINGS #

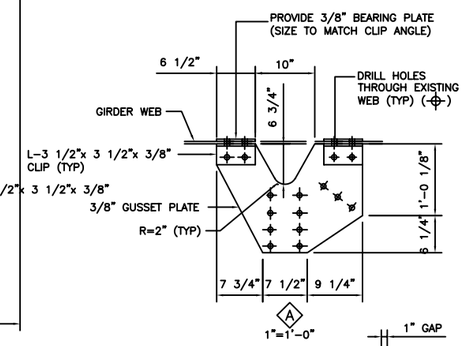

A
1"=1'-0"

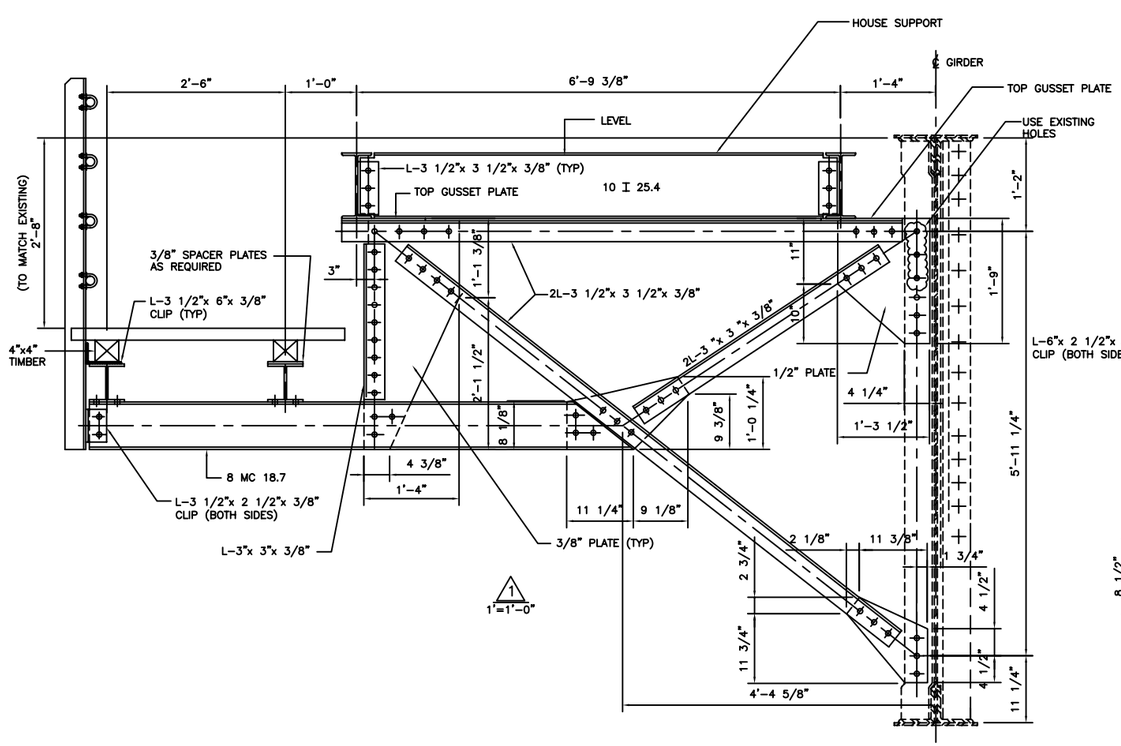

1
1'=1'-0"

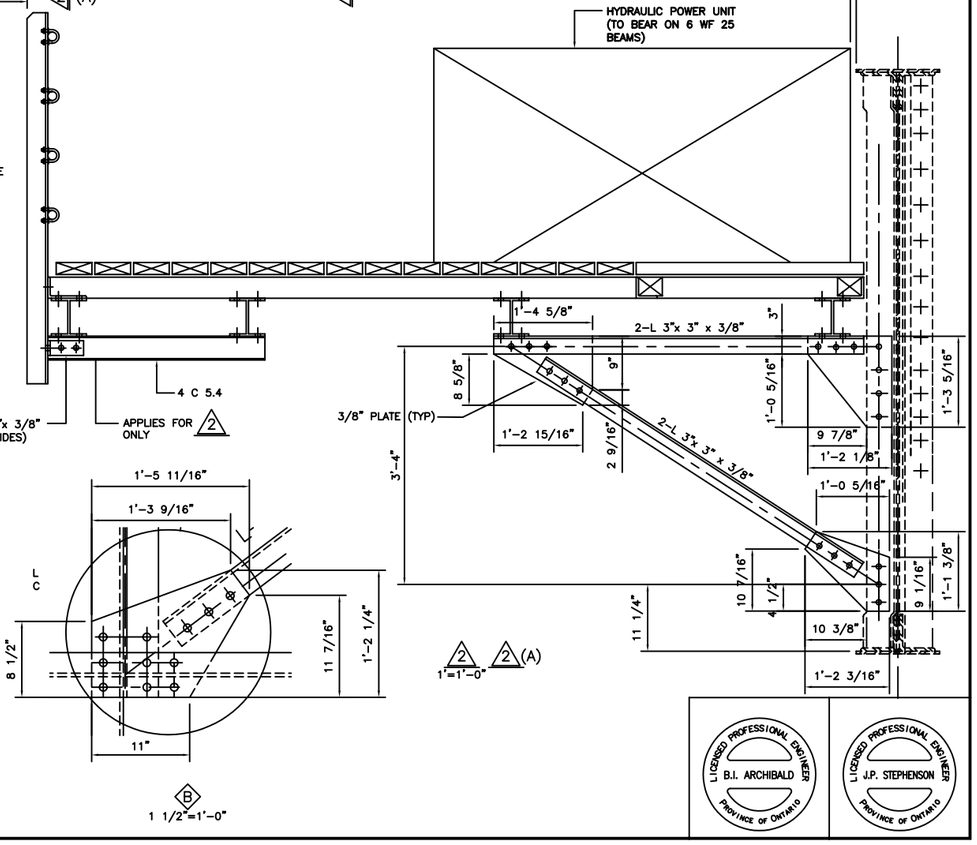

B
1 1/2"=1'-0"

2 (A)
1'=1'-0"

LICENSED PROFESSIONAL ENGINEER B.I. ARCHIBALD PROVINCE OF ONTARIO

LICENSED PROFESSIONAL ENGINEER J.P. STEPHENSON PROVINCE OF ONTARIO

THE MINISTRY OF WORKS AND ENGINEERING

P.O. Box HM525 Hamilton HMCX Bermuda
Phone: (441)295-5151

DELCAN INTERNATIONAL
Toronto Canada

GENERAL NOTES:

1. ALL DIMENSIONS TO BE VERIFIED IN THE FIELD BY THE CONTRACTOR.

ISSUED FOR: CONSTRUCTION

AMENDMENTS:

NO:	REVISION	APP	DATE:
1	AS-BUILT	J.C.	06/03/2001
0	ISSUE FOR CONSTRUCTION		31/03/2000

SCALE: AS SHOWN

SURVEY
PREPARED BY: N/A
DATE:

DESIGN
PREPARED BY: B.I.A.
DATE: 31/01/2000
CHECKED BY: J.P.S.
DATE: 31/01/2000

DRAWING
PREPARED BY: A.B.M.
DATE: 31/01/2000
CHECKED BY: B.I.A.
DATE: 31/01/2000

APPROVED BY:

PROJECT NUMBER: 44/21/02

PROJECT NAME:
LONGBIRD BRIDGE REHABILITATION

DRAWING FILE NO: S8.DWG
ACAD R-14

SHEET TITLE:
WALKWAY AND CONTROL HOUSE-3

SHEET NUMBER: S8
REVISION 1

NOTES:

1. CONTRACTOR TO COORDINATE REMOVALS WITH MACHINERY REMOVALS DETAILED IN THE MECHANICAL SPECIFICATIONS.

LEGEND

INDICATES MISCELLANEOUS STRUCTURAL STEEL REMOVAL

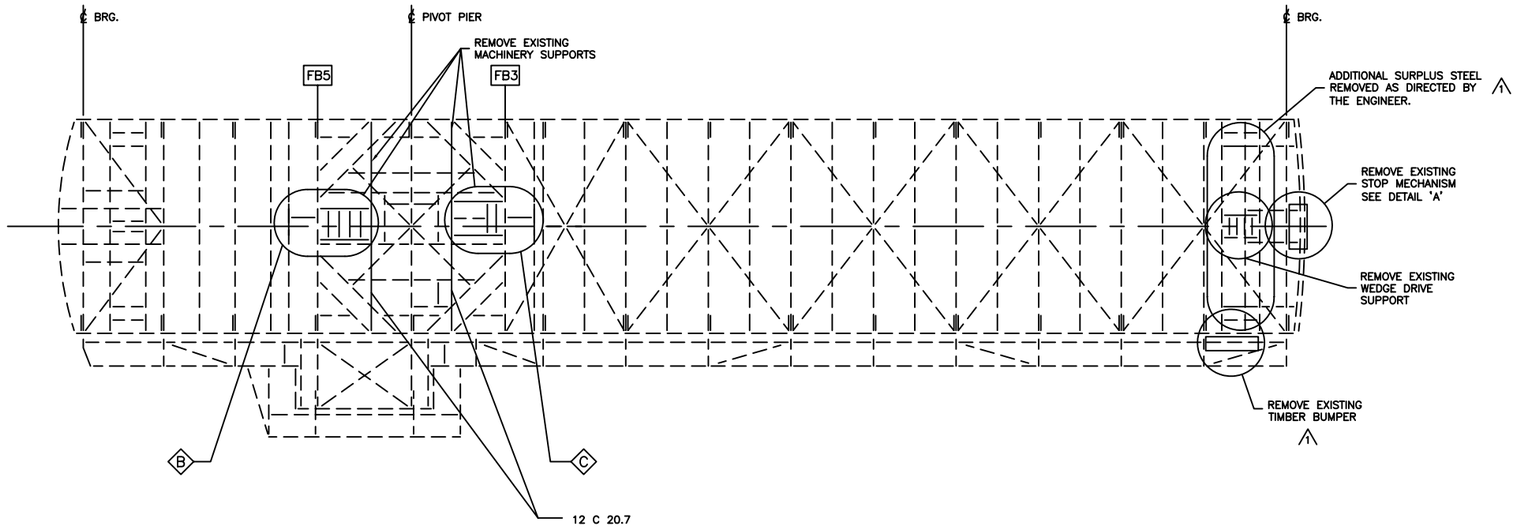

KEY PLAN
1/8"=1'-0"

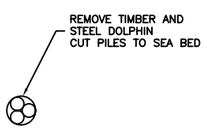

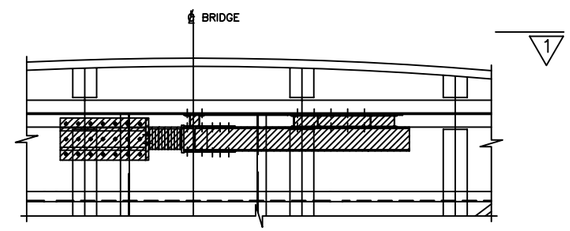

A
1/2"=1'-0"

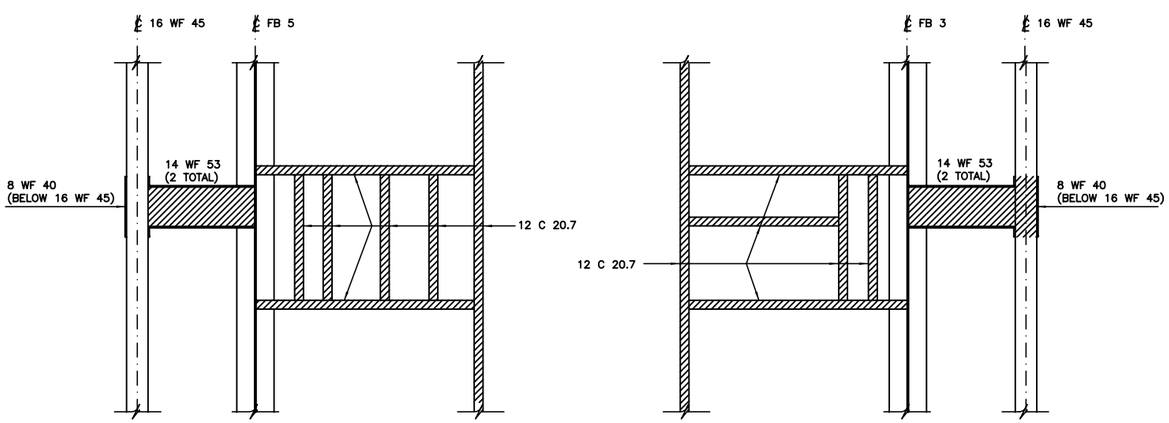

B
1/2 " = 1'-0"

C
1/2 " = 1'-0"

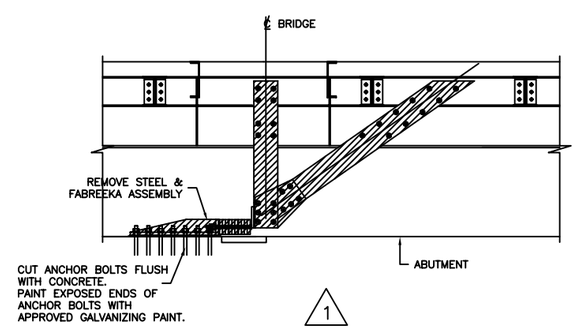

1
1/2"=1'-0"

THE MINISTRY OF WORKS AND ENGINEERING

P.O. Box HM525 Hamilton HMCX Bermuda
Phone: (441)295-5151

DELCAN INTERNATIONAL
Toronto Canada

GENERAL NOTES:

1. FOR GENERAL NOTES SEE DRAWING NO. S1.
2. DIMENSIONS TO BE CONFIRMED IN THE FIELD BY THE CONTRACTOR.

ISSUED FOR: CONSTRUCTION

AMENDMENTS:

NO:	REVISION	APP	DATE:
1	AS-BUILT	J.C.	06/03/2001
0	ISSUE FOR CONSTRUCTION		31/03/2000

SCALE: AS SHOWN

SURVEY
PREPARED BY: N/A DATE:

DESIGN
PREPARED BY: J.M.C. DATE: 31/01/2000
CHECKED BY: B.I.A. DATE: 31/01/2000

DRAWING
PREPARED BY: K.R.S. DATE: 31/01/2000
CHECKED BY: J.M.C. DATE: 31/01/2000

APPROVED BY:

PROJECT NUMBER: 44/21/02

PROJECT NAME:
LONGBIRD BRIDGE REHABILITATION

DRAWING FILE NO: S18.DWG ACAD R-14

SHEET TITLE:
MISCELANEOUS STRUCTURAL REMOVALS

SHEET NUMBER: S18 REVISION 1

LICENSED PROFESSIONAL ENGINEER J.M. CRABB PROVINCE OF ONTARIO

LICENSED PROFESSIONAL ENGINEER B.I. ARCHIBALD PROVINCE OF ONTARIO

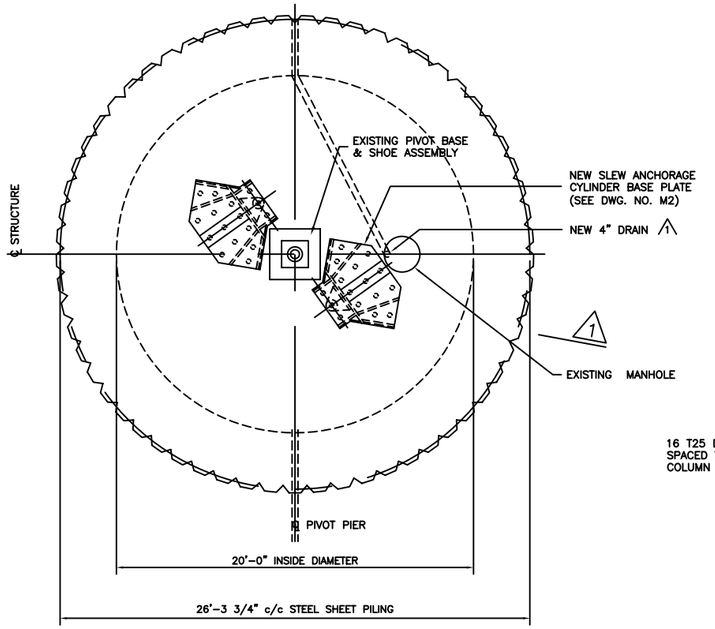

PLAN (TOP SLAB)
1/4"=1'-0" 1

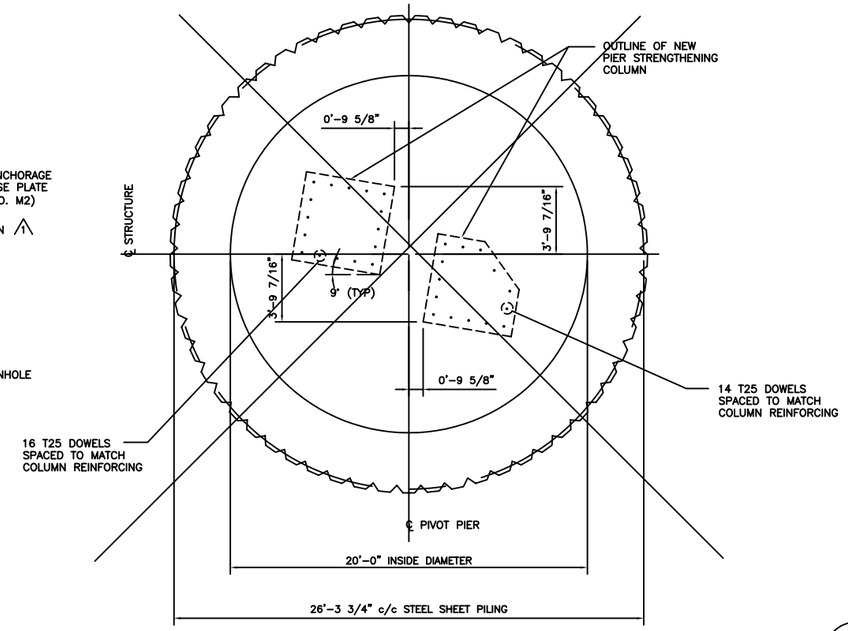

PLAN (BOTTOM SLAB)
1/4"=1'-0" DELETED 1

NOTES:

1. ~~EXISTING CONCRETE SURFACES, AGAINST WHICH NEW EXISTING CONCRETE OR GROUT IS TO BE CAST, SHALL~~ BE ~~ROUGHENED AS INDICATED ON THE DRAWING. ROUGHENED~~ EXISTING CONCRETE SURFACES SHALL BE CLEAN AND FREE OF DEBRIS, DIRT, ETC. PRIOR TO PLACEMENT OF NEW CONCRETE. 1
2. ~~THE CONTRACTOR SHALL BE PERMITTED TO CORE UP TO 4 ACCESS HOLES, 3-1/2" DIA. AT 90° SPACING, THROUGH THE PIER WALL TO PERMIT REINFORCING TO BE PASSED INTO PIER CAVITY. ACCESS HOLES TO BE REINFORCED WITH A STEEL PIPE 3-1/2"O.D. x 3/8" THICK, GROUTED IN PLACE WITH AN APPROVED EPOXY RESIN GROUT. SUCH HOLES SHALL BE FILLED WITH CONCRETE OR GROUT WHEN NO LONGER REQUIRED.~~ 1
4. THE CONTRACTOR SHALL REVIEW ALL CORE LOCATIONS WITH THE ENGINEER PRIOR TO CORING.
5. ALL CORES SHALL BE MADE USING A HOLLOW CORE DRILL. PERCUSSION DRILLING SHALL NOT BE PERMITTED.
6. THE CONTRACTOR SHALL RETAIN ALL CORES AND EACH CORE SHALL BE GIVEN A NUMBER IN ORDER TO IDENTIFY THE LOCATION FROM WHICH IT WAS TAKEN.
7. CORES SHALL BE SUBMITTED TO THE ENGINEER FOR INSPECTION.
8. NEW CONCRETE SHALL BE SUFFICIENTLY VIBRATED TO ENSURE THERE ARE NO AIR VOIDS.
9. THE CONTRACTOR SHALL DEMONSTRATE TO THE ENGINEER THAT THE CONCRETE INTERFACE BETWEEN THE EXISTING CONCRETE AND NEW CONCRETE IS SOUND AND FREE OF VOIDS. THE CONTRACTOR SHALL REPAIR ANY DEFECTS AS DIRECTED BY THE ENGINEER. THIS REPAIR (IF REQUIRED) MAY REQUIRE EPOXY INJECTION WORK. 1
10. THE CONTRACTOR SHALL ~~BE PERMITTED TO~~ DEWATER THE INSIDE OF THE PIER. ALL COST FOR ANY SUCH DEWATERING OPERATIONS SHALL BE PAID BY THE CONTRACTOR 1
11. THE CONTRACTOR MAY SEAL HOLES IN PIER WALLS DURING DEWATERING. ~~ANY EXISTING HOLES THAT THE CONTRACTOR SEALS FOR CONSTRUCTION SHALL BE RE-OPENED AT THE END OF CONSTRUCTION.~~ 1
12. THIS DRAWING IS TO BE READ IN CONJUNCTION WITH DWG. NOS. S15, S16 & M2.

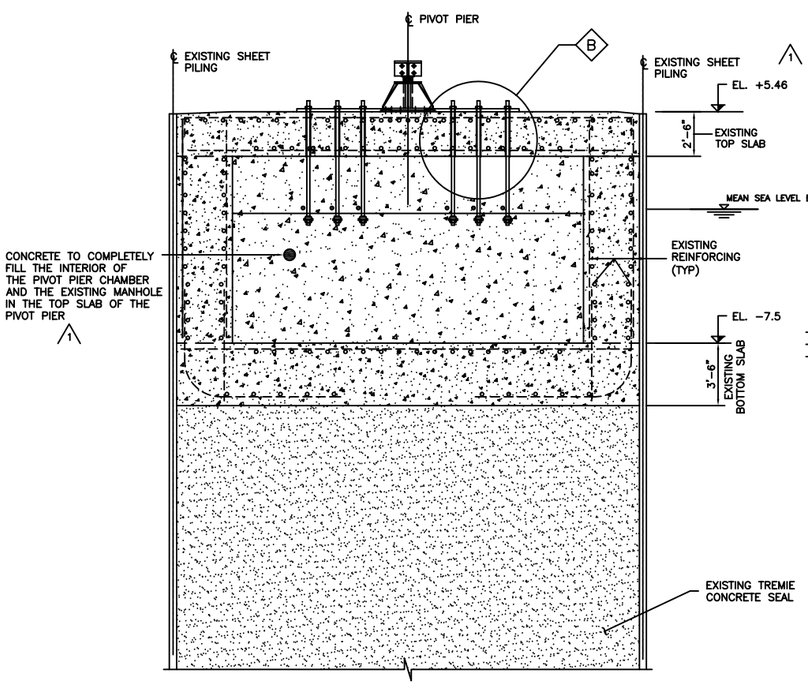

1 ELEVATION
1/4"=1'-0" 1

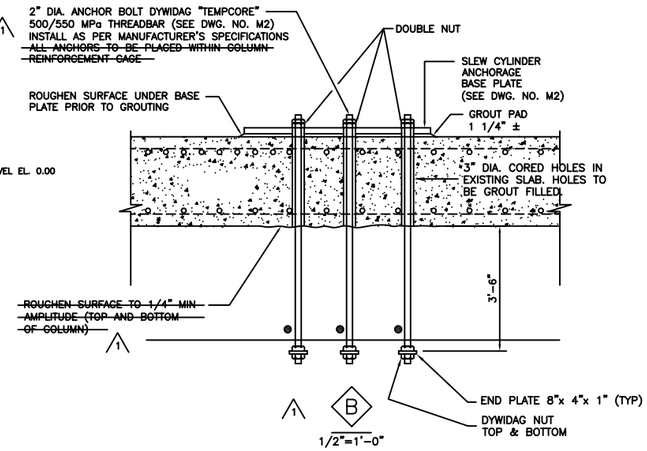

1 B
1/2"=1'-0"

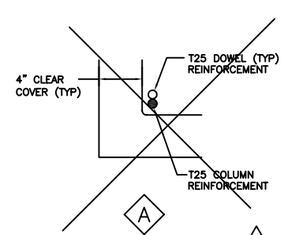

A
N.T.S. DELETED 1

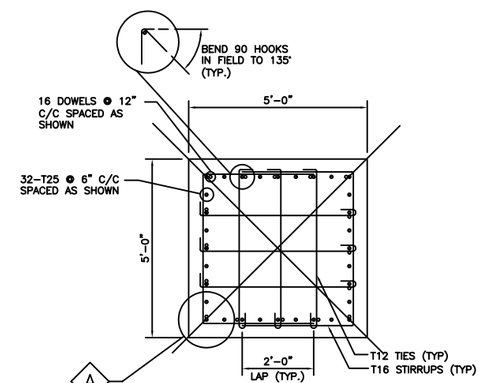

2 SECTION
1/2"=1'-0" DELETED 1

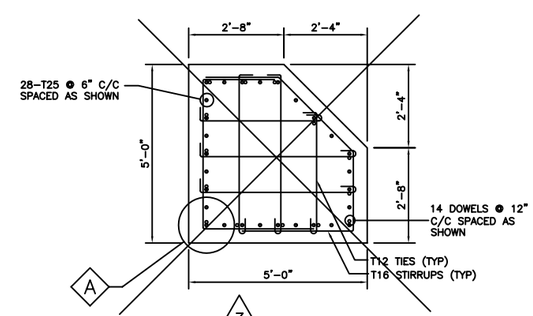

3 SECTION
1/2"=1'-0" DELETED 1

LICENSED PROFESSIONAL ENGINEER B.I. ARCHIBALD PROVINCE OF ONTARIO

LICENSED PROFESSIONAL ENGINEER J.P. STEPHENSON PROVINCE OF ONTARIO

THE MINISTRY OF WORKS AND ENGINEERING

P.O. Box HM525 Hamilton HMCX Bermuda
Phone: (441)295-5151

DELCAN INTERNATIONAL Toronto Canada

GENERAL NOTES:

1. ALL DIMENSIONS TO BE VERIFIED IN THE FIELD BY THE CONTRACTOR.

ISSUED FOR: CONSTRUCTION

AMENDMENTS:

NO:	REVISION	APP	DATE:
2	AS-BUILT	J.C.	06/03/2001
1	ADDENDUM No.1		12/06/2000
0	ISSUE FOR CONSTRUCTION		31/03/2000

SCALE: AS SHOWN

SURVEY
PREPARED BY: N/A DATE:

DESIGN
PREPARED BY: B.I.A. DATE: 31/01/2000
CHECKED BY: J.P.S. DATE: 31/01/2000

DRAWING
PREPARED BY: ABM DATE: 31/01/2000
CHECKED BY: B.I.A. DATE: 31/01/2000

APPROVED BY:

PROJECT NUMBER: 44/21/02

PROJECT NAME:
LONGBIRD BRIDGE REHABILITATION

DRAWING FILE NO: S17.DWG ACAD R-14

SHEET TITLE:
PIVOT PIER MODIFICATIONS

SHEET NUMBER: S17 REVISION 2

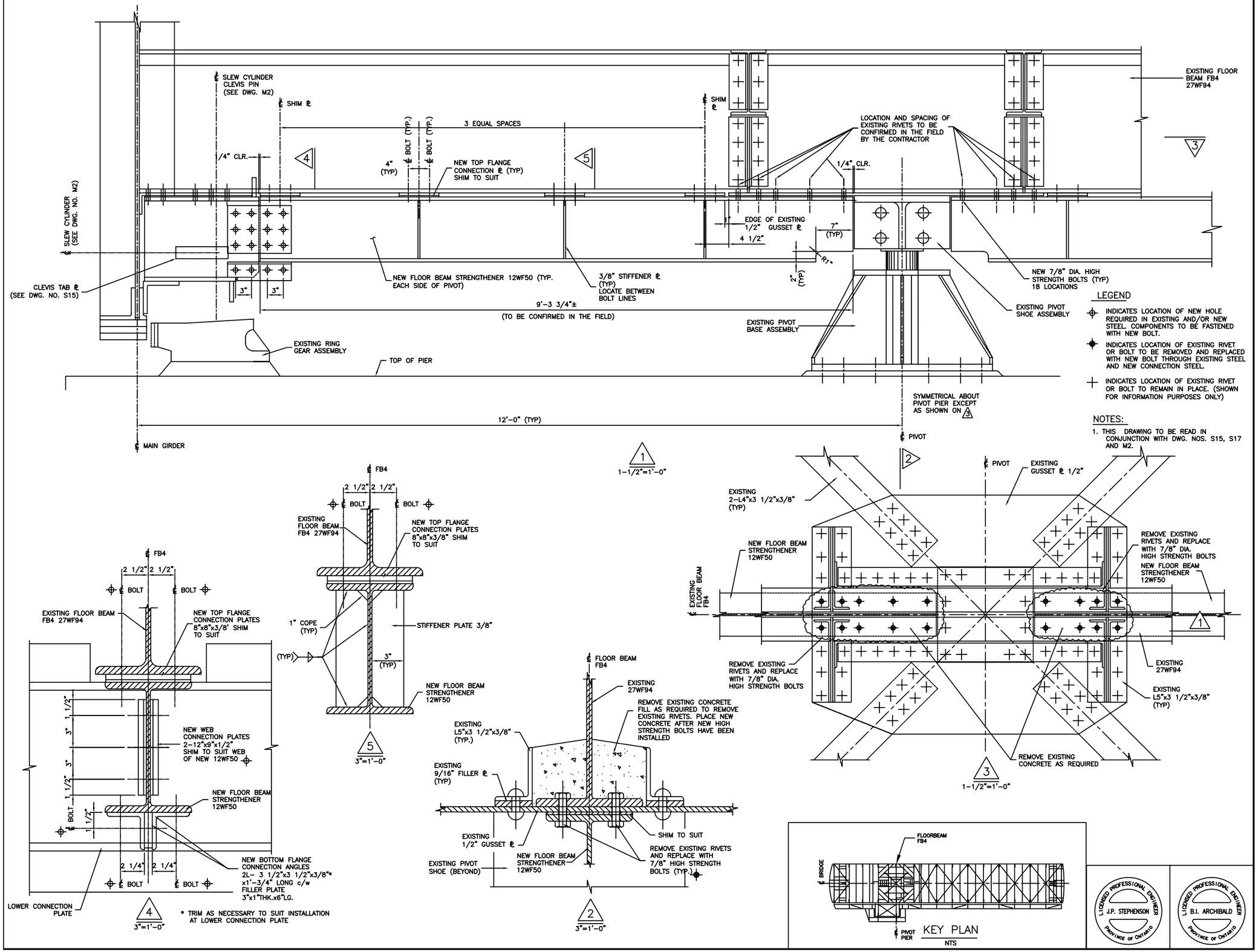

LEGEND

- INDICATES LOCATION OF NEW HOLE REQUIRED IN EXISTING AND/OR NEW STEEL. COMPONENTS TO BE FASTENED WITH NEW BOLT.
- INDICATES LOCATION OF EXISTING RIVET OR BOLT TO BE REMOVED AND REPLACED WITH NEW BOLT THROUGH EXISTING STEEL AND NEW CONNECTION STEEL.
- INDICATES LOCATION OF EXISTING RIVET OR BOLT TO REMAIN IN PLACE. (SHOWN FOR INFORMATION PURPOSES ONLY)

NOTES:

1. THIS DRAWING TO BE READ IN CONJUNCTION WITH DWG. NOS. S15, S17 AND M2.

THE MINISTRY OF WORKS AND ENGINEERING

P.O. Box HM525 Hamilton HMCX Bermuda
Phone: (441)295-5151

DELCAN INTERNATIONAL
Toronto Canada

GENERAL NOTES:

1. FOR GENERAL NOTES SEE DRAWING NO. S1.
2. DIMENSIONS TO BE CONFIRMED IN THE FIELD BY THE CONTRACTOR.

ISSUED FOR: CONSTRUCTION

AMENDMENTS:

NO:	REVISION	APP	DATE:
1	AS-BUILT	J.C.	06/03/2001
0	ISSUE FOR CONSTRUCTION		31/03/200

SCALE: AS SHOWN

SURVEY
PREPARED BY: N/A
DATE:

DESIGN
PREPARED BY: J.P.S.
DATE: 31/01/20
CHECKED BY: B.I.A.
DATE: 31/01/20

DRAWING
PREPARED BY: K.R.S.
DATE: 31/01/20
CHECKED BY: J.P.S.
DATE: 31/01/20

APPROVED BY:

PROJECT NUMBER: 44/21/02

PROJECT NAME:
LONGBIRD BRIDGE REHABILITATION

DRAWING FILE NO: S16.DWG
ACAD R-14

SHEET TITLE:
FLOOR BEAM (FB4) MODIFICATIONS

SHEET NUMBER: S16
REVISION 1

LICENSED PROFESSIONAL ENGINEER J.P. STEPHENSON PROVINCE OF ONTARIO

LICENSED PROFESSIONAL ENGINEER B.I. ARCHIBALD PROVINCE OF ONTARIO

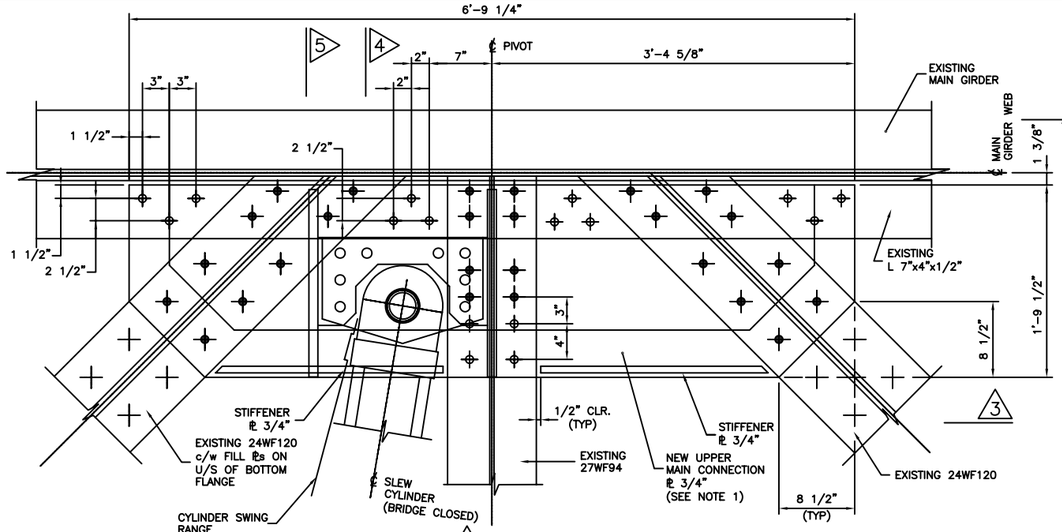

1 TOP PLATE
1 1/2"=1'-0"

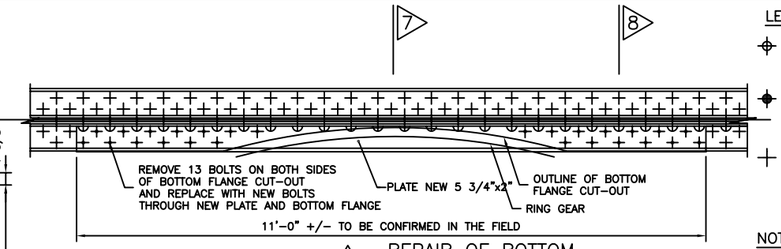

6 REPAIR OF BOTTOM FLANGE CUT-OUT
1-1/2"=1'-0"

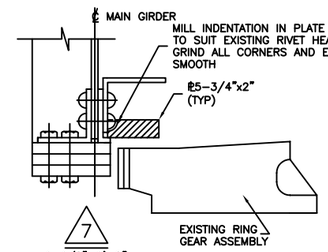

7
1-1/2"=1'-0"

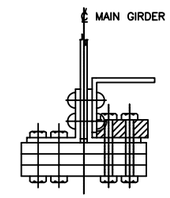

8
1-1/2"=1'-0"

LEGEND

- INDICATES LOCATION OF NEW HOLE REQUIRED IN EXISTING AND/OR NEW STEEL. COMPONENTS TO BE FASTENED WITH NEW BOLT.
- INDICATES LOCATION OF EXISTING RIVET OR BOLT TO BE REMOVED AND REPLACED WITH NEW BOLT THROUGH EXISTING STEEL AND NEW CONNECTION STEEL.
- INDICATES LOCATION OF EXISTING RIVET OR BOLT TO REMAIN IN PLACE. (SHOWN FOR INFORMATION PURPOSES ONLY)

NOTES:

1. THIS DRAWING TO BE READ IN CONJUNCTION WITH DWG. Nos. S16, S17, M2 & M5.
2. REPAIR OF BOTTOM FLANGE CUT-OUT ONLY TO BE CARRIED OUT IN ACCORDANCE WITH CONTRACTOR'S APPROVED STEP-BY-STEP PROCEDURE TO ENSURE SAFETY AT ALL TIMES.

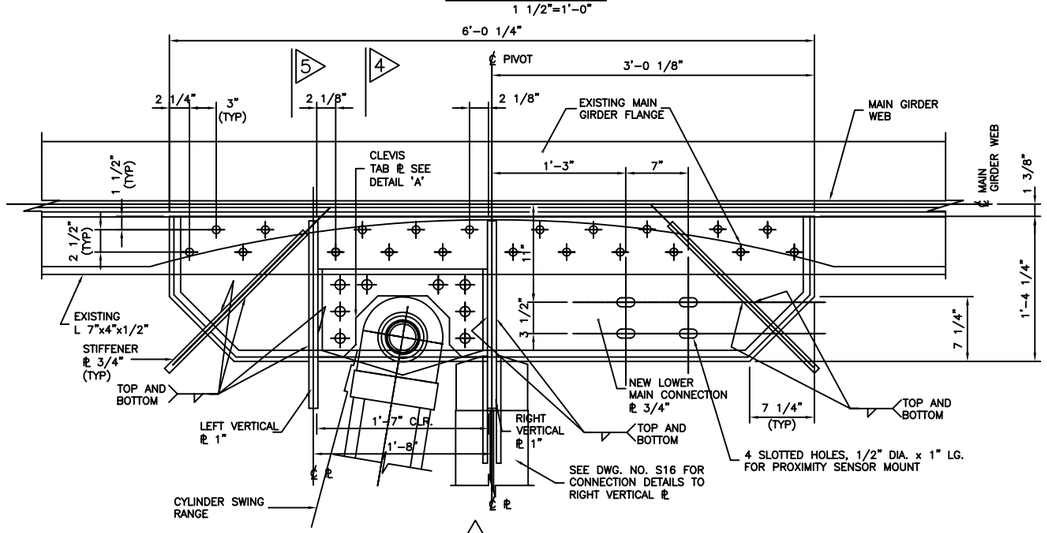

2 BOTTOM PLATE
1 1/2"=1'

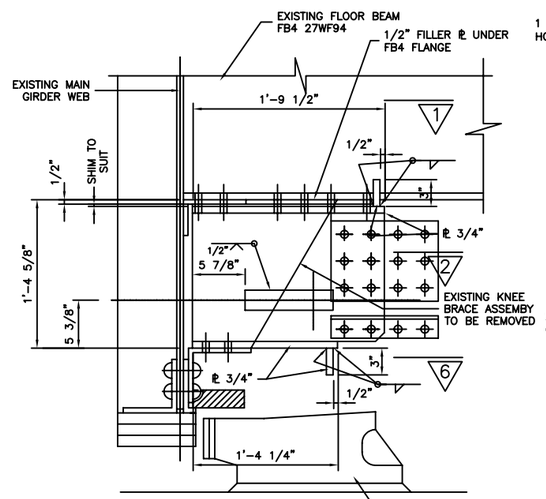

4
1-1/2"=1'-0"

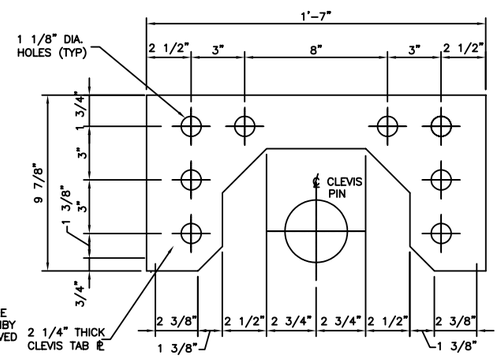

A CLEVIS TAB ℞
3"=1'-0"

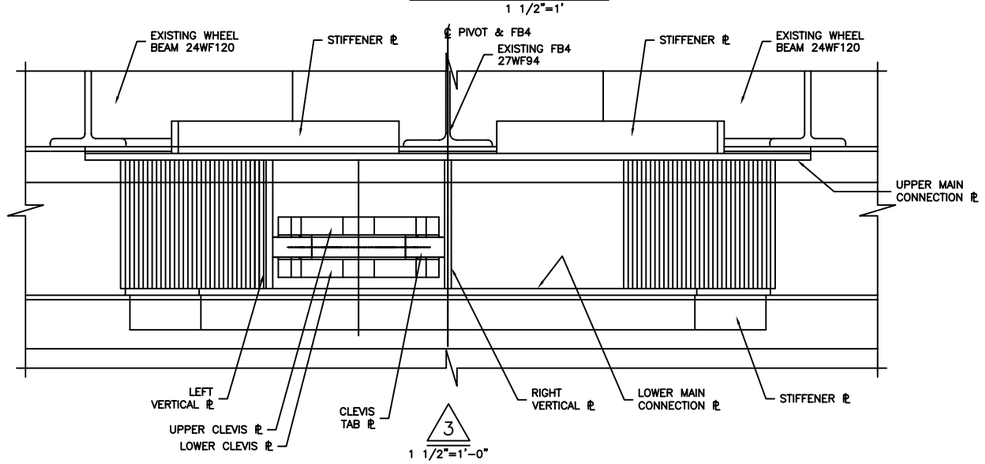

3
1 1/2"=1'-0"

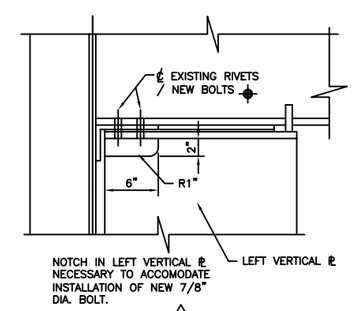

5
1-1/2"=1'-0"

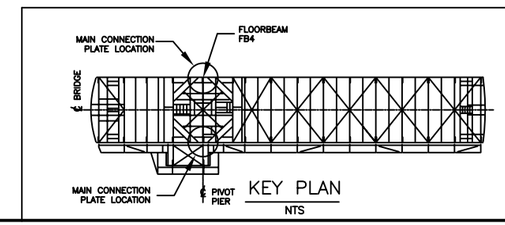

KEY PLAN
NTS

LICENSED PROFESSIONAL ENGINEER J.P. STEPHENSON PROVINCE OF ONTARIO

LICENSED PROFESSIONAL ENGINEER B.I. ARCHIBALD PROVINCE OF ONTARIO

THE MINISTRY OF WORKS AND ENGINEERING

P.O. Box HM525 Hamilton HMCX Bermuda
Phone: (441)295-5151

DELCAN INTERNATIONAL Toronto Canada

GENERAL NOTES:

1. FOR GENERAL NOTES SEE DRAWING NO. S1.
2. DIMENSIONS TO BE CONFIRMED IN THE FIELD BY THE CONTRACTOR.

ISSUED FOR: CONSTRUCTION

AMENDMENTS:

NO:	REVISION	APP	DATE:
1	AS-BUILT	J.C.	06/03/2001
0	ISSUE FOR CONSTRUCTION		31/03/2000

SCALE: AS SHOWN

SURVEY
PREPARED BY: N/A DATE:

DESIGN
PREPARED BY: J.P.S. DATE: 31/01/2000
CHECKED BY: B.I.A. DATE: 31/01/2000

DRAWING
PREPARED BY: K.R.S DATE: 31/01/2000
CHECKED BY: J.P.S DATE: 31/01/2000

APPROVED BY:

PROJECT NUMBER: 44/21/02

PROJECT NAME:

LONGBIRD BRIDGE REHABILITATION

DRAWING FILE NO: S15.DWG ACAD R-14

SHEET TITLE:

SLEW CYLINDER CONNECTION AT MAIN GIRDERS

SHEET NUMBER: S15 REVISION 1

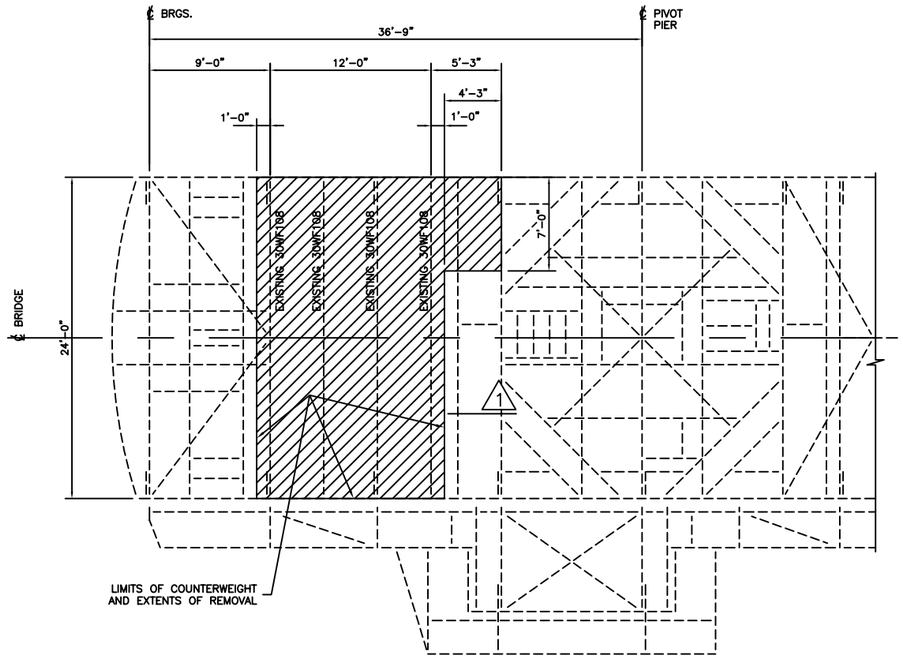

PLAN
3/16"=1'-0"

NOTES:

1. THE BRIDGE SHALL BE IN THE CLOSED POSITION WITH THE BRIDGE ENDS SUPPORTED AT ALL TIMES DURING THE REPAIR OF THE CONCRETE COUNTERWEIGHT.
2. THE CONTRACTOR SHALL CONFORM TO ALL APPLICABLE SAFETY REQUIREMENTS AS SET OUT IN THE SPECIFICATIONS AND AS GOVERNED BY APPLICABLE LAW.
3. THE CONTRACTOR SHALL SUBMIT, TO THE ENGINEER, A DETAILED PROCEDURE FOR THE REPAIR OF THE COUNTERWEIGHT. THE ENGINEER SHALL APPROVE THE PROCEDURE BEFORE THE WORK COMMENCES.
4. SEE SPECIFICATIONS FOR EXTENSIVE NOTES ON DEALING WITH THE SAFETY RISK IN THIS WORK.
5. IF UNSOUND CONCRETE EXTENDS BEYOND 12" FROM U/S OF COUNTERWEIGHT, REMOVAL SHALL BE STOPPED AND THE ENGINEER NOTIFIED IMMEDIATELY.
6. IF SIGNIFICANT INTERNAL CRACKS ARE ENCOUNTERED, THE CONTRACTOR SHALL REPAIR SUCH CRACKS AS DIRECTED BY THE ENGINEER. SUCH REPAIRS (IF NECESSARY) MAY REQUIRE EPOXY GROUT INJECTION.
7. UNDERSIDE OF REPAIRED COUNTERWEIGHT TO BE SET AT SAME LEVEL AS UNDERSIDE OF EXISTING COUNTERWEIGHT.

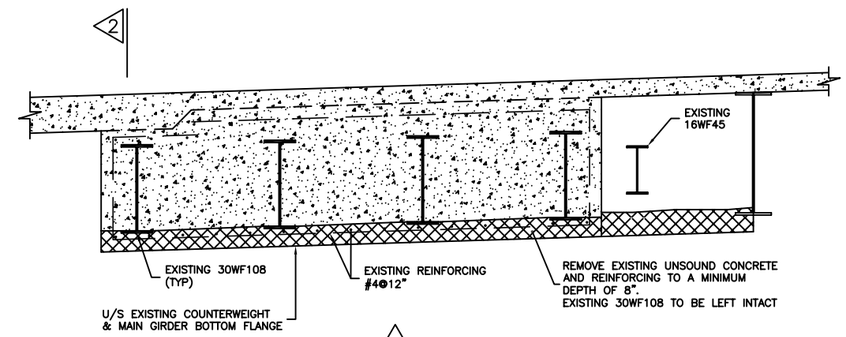

1 REMOVALS
1/2"=1'-0"

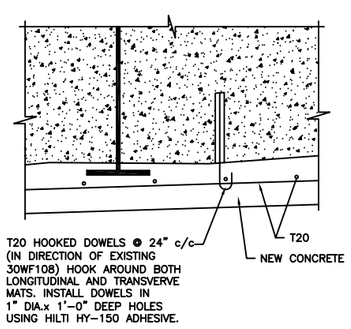

A NEW HOOK DOWEL DETAIL
1"=1'-0"

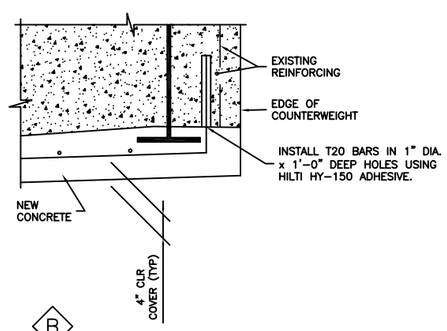

B END BAR ANCHORAGE DETAIL
1"=1'-0"

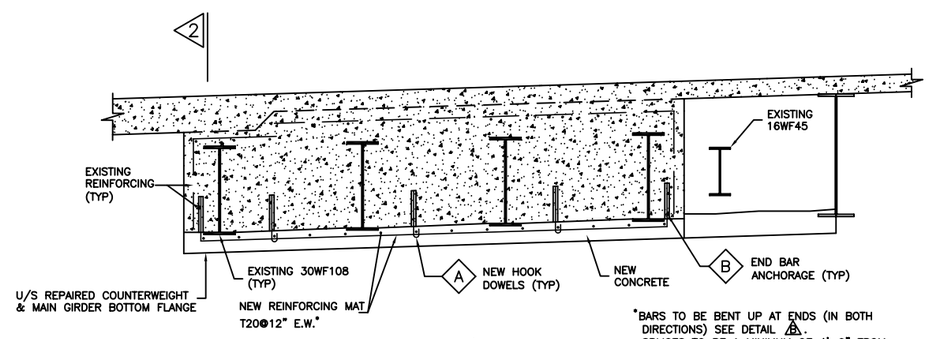

1 REPAIRS
1/2"=1'-0"

*BARS TO BE BENT UP AT ENDS (IN BOTH DIRECTIONS) SEE DETAIL B. SPLICES TO BE A MINIMUM OF 4'-0" FROM EDGE OF COUNTERWEIGHT. SPLICES IN ADJACENT BARS TO BE STAGGERED A MINIMUM OF 4'-0".

1 SUBSTITUTED

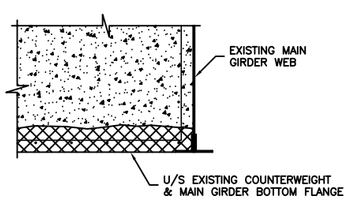

2 REMOVALS
1/2"=1'-0"

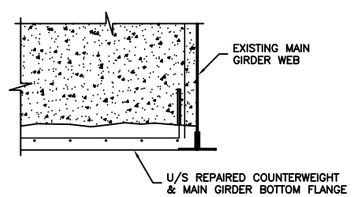

2 REPAIRS
1/2"=1'-0"

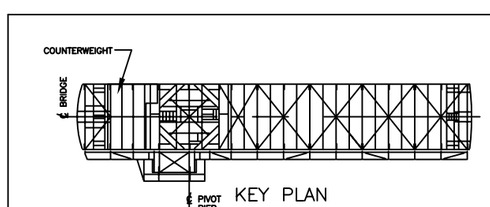

KEY PLAN
NTS

LICENSED PROFESSIONAL ENGINEER J.P. STEPHENSON PROVINCE OF ONTARIO

LICENSED PROFESSIONAL ENGINEER B.I. ARCHIBALD PROVINCE OF ONTARIO

THE MINISTRY OF WORKS AND ENGINEERING

P.O. Box HM525 Hamilton HMCX Bermuda
Phone: (441)295-5151

DELCAN INTERNATIONAL
Toronto Canada

GENERAL NOTES:

1. FOR GENERAL NOTES SEE DRAWING NO. S1.
2. DIMENSIONS TO BE CONFIRMED IN THE FIELD BY THE CONTRACTOR.

ISSUED FOR: CONSTRUCTION

AMENDMENTS:

NO:	REVISION	APP	DATE:
1	AS-BUILT	J.C.	06/03/2001
0	ISSUE FOR CONSTRUCTION		31/03/2000

SCALE: AS SHOWN

SURVEY
PREPARED BY: N/A DATE:

DESIGN
PREPARED BY: J.P.S. DATE: 31/01/2000
CHECKED BY: B.I.A. DATE: 31/01/2000

DRAWING
PREPARED BY: K.R.S. DATE: 31/01/2000
CHECKED BY: J.P.S. DATE: 31/01/2000

APPROVED BY:

PROJECT NUMBER: 44/21/02

PROJECT NAME:
LONGBIRD BRIDGE REHABILITATION

DRAWING FILE NO: S14.DWG ACAD R-14

SHEET TITLE:
COUNTERWEIGHT REPAIRS

SHEET NUMBER: S14 REVISION 1

NOTE:

ALL EXISTING SUPPORTS AND FRAMING TO BE REMOVED BY THE CONTRACTOR. GRATINGS ARE TO BE SALVAGED.

LEGEND

- INDICATES LOCATION OF NEW HOLE REQUIRED IN EXISTING AND/OR NEW STEEL. COMPONENTS TO BE FASTENED WITH NEW BOLT.
- INDICATES LOCATION OF EXISTING RIVET OR BOLT TO BE REMOVED AND REPLACED WITH NEW BOLT THROUGH EXISTING STEEL AND NEW CONNECTION STEEL
- INDICATES LOCATION OF EXISTING RIVET OR BOLT TO REMAIN IN PLACE. (SHOWN FOR INFORMATION PURPOSES ONLY)

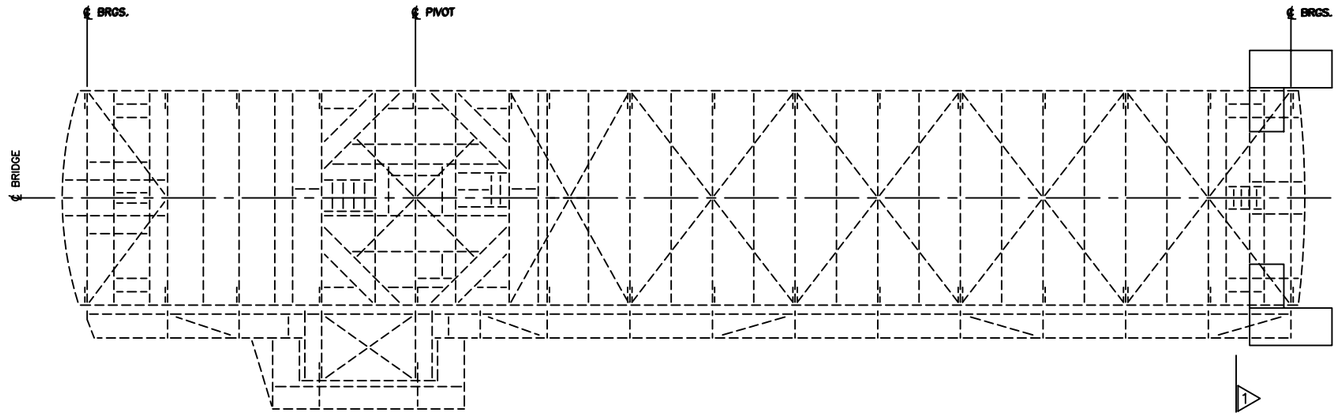

KEY PLAN
1/8" = 1'-0"

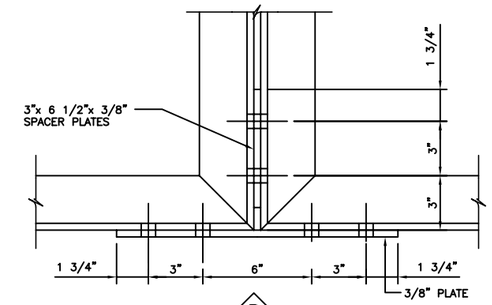

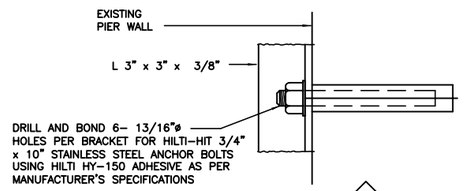

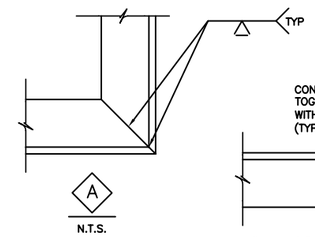

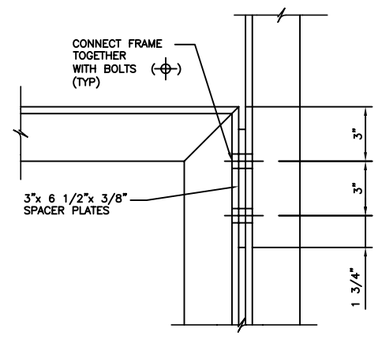

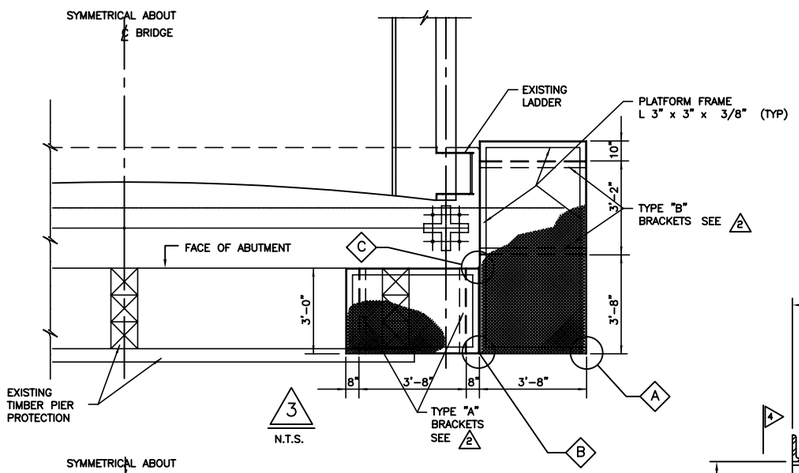

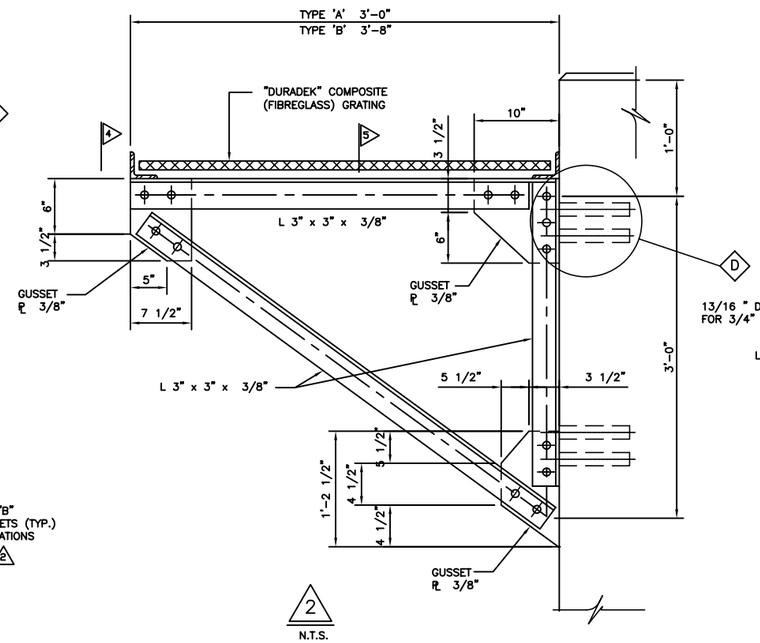

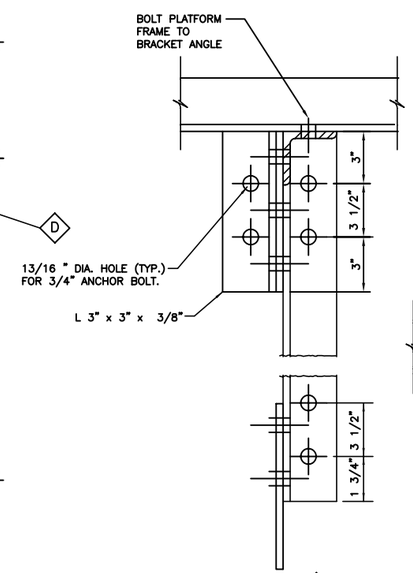

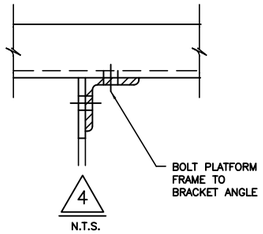

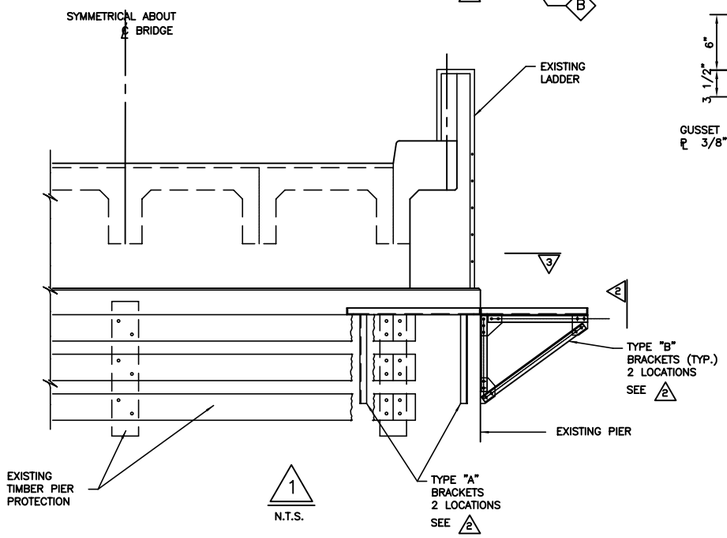

LICENSED PROFESSIONAL ENGINEER
B.I. ARCHIBALD
PROVINCE OF ONTARIO

LICENSED PROFESSIONAL ENGINEER
J.P. STEPHENSON
PROVINCE OF ONTARIO

THE MINISTRY OF WORKS AND ENGINEERING

P.O. Box HM525 Hamilton HMCX Bermuda
Phone: (441)295-5151

DELCAN INTERNATIONAL
Toronto Canada

GENERAL NOTES:

1. FOR GENERAL NOTES SEE DRAWING NO. S1.
2. DIMENSIONS TO BE CONFIRMED IN THE FIELD BY THE CONTRACTOR.

ISSUED FOR: CONSTRUCTION

AMENDMENTS:

NO:	REVISION	APP	DATE:
	AS-BUILT	J.C.	06/03/2001
0	ISSUE FOR CONSTRUCTION		31/03/2000

SCALE: AS SHOWN

SURVEY
PREPARED BY: N/A — DATE:

DESIGN
PREPARED BY: B.I.A. — DATE: 31/01/2000
CHECKED BY: J.P.S. — DATE: 31/01/2000

DRAWING
PREPARED BY: K.V.H. — DATE: 31/01/2000
CHECKED BY: B.I.A. — DATE: 31/01/2000

APPROVED BY:

PROJECT NUMBER: 44/21/02

PROJECT NAME:
LONGBIRD BRIDGE REHABILITATION

DRAWING FILE NO: S13.DWG — ACAD R-14

SHEET TITLE:
WORK PLATFORM REPAIRS

SHEET NUMBER: S13 — REVISION 1

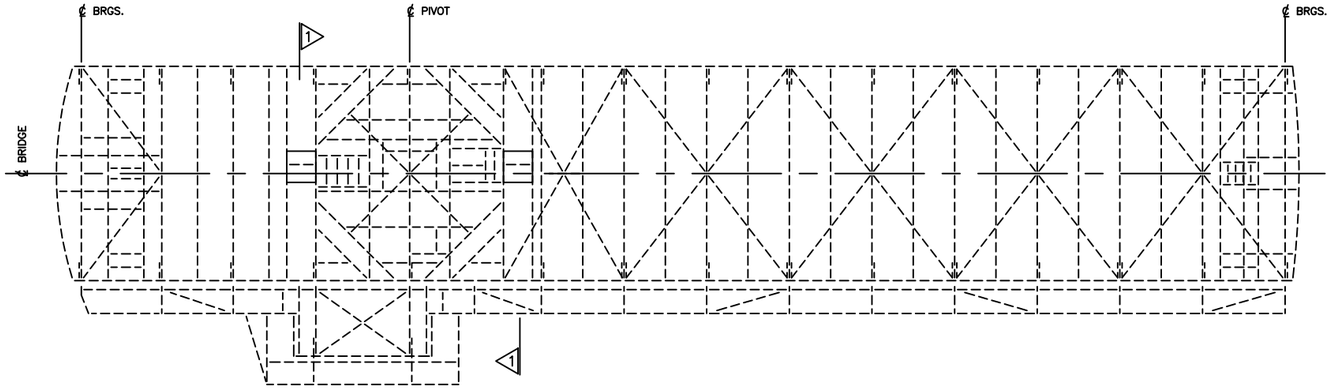

KEY PLAN
1/8" = 1'-0"

LEGEND

- INDICATES LOCATION OF NEW HOLE REQUIRED IN EXISTING AND/OR NEW STEEL. COMPONENTS TO BE FASTENED WITH NEW BOLT.
- INDICATES LOCATION OF EXISTING RIVET OR BOLT TO BE REMOVED AND REPLACED WITH NEW BOLT THROUGH EXISTING STEEL AND NEW CONNECTION STEEL
- INDICATES LOCATION OF EXISTING RIVET OR BOLT TO REMAIN IN PLACE. (SHOWN FOR INFORMATION PURPOSES ONLY)

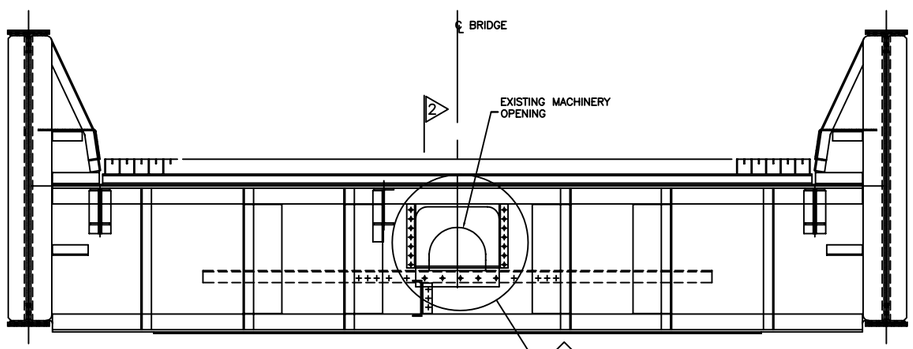

SECTION 1
1/2" = 1'-0"

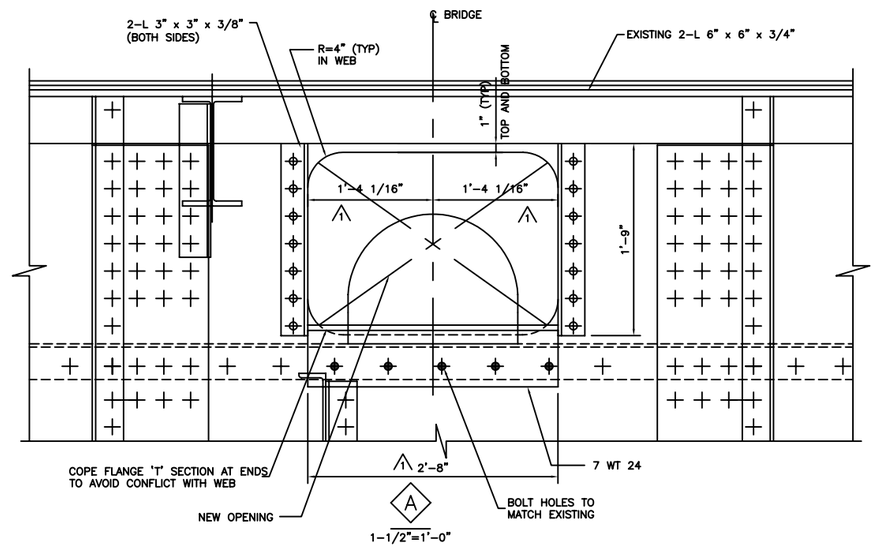

1-1/2"=1'-0"

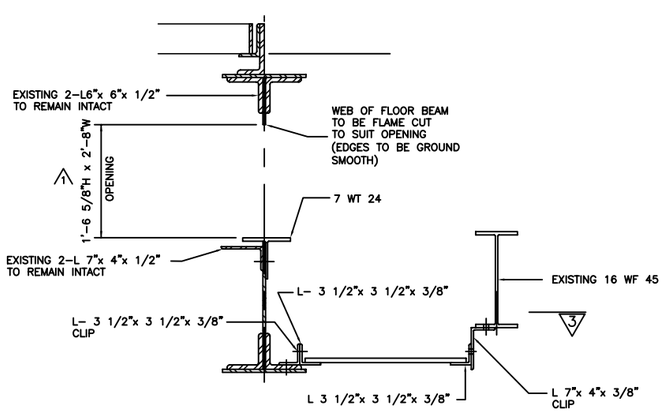

SECTION 2
1" = 1'-0"

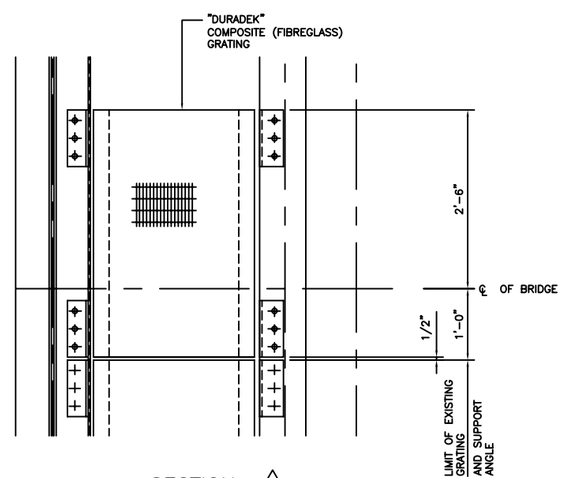

SECTION 3
1" = 1'-0"

LICENSED PROFESSIONAL ENGINEER B.I. ARCHIBALD PROVINCE OF ONTARIO

LICENSED PROFESSIONAL ENGINEER J.P. STEPHENSON PROVINCE OF ONTARIO

THE MINISTRY OF WORKS AND ENGINEERING

P.O. Box HM525 Hamilton HMCX Bermuda
Phone: (441)295-5151

DELCAN INTERNATIONAL
Toronto Canada

GENERAL NOTES:
1. FOR GENERAL NOTES SEE DRAWING NO. S1.
2. DIMENSIONS TO BE CONFIRMED IN THE FIELD BY THE CONTRACTOR.

ISSUED FOR: CONSTRUCTION

AMENDMENTS:

NO:	REVISION	APP	DATE:
1	AS-BUILT	J.C.	06/03/2001
0	ISSUE FOR CONSTRUCTION		31/03/2000

SCALE: AS SHOWN

SURVEY
PREPARED BY: N/A DATE:

DESIGN
PREPARED BY: B.I.A. DATE: 31/01/2000
CHECKED BY: J.P.S. DATE: 31/01/2000

DRAWING
PREPARED BY: A.B.M. DATE: 31/01/2000
CHECKED BY: B.I.A. DATE: 31/01/2000

APPROVED BY:

PROJECT NUMBER: 44/21/02

PROJECT NAME:
LONGBIRD BRIDGE REHABILITATION

DRAWING FILE NO: S12.DWG ACAD R-14

SHEET TITLE:
PIVOT PIER ACCESS

SHEET NUMBER: S12 REVISION 1

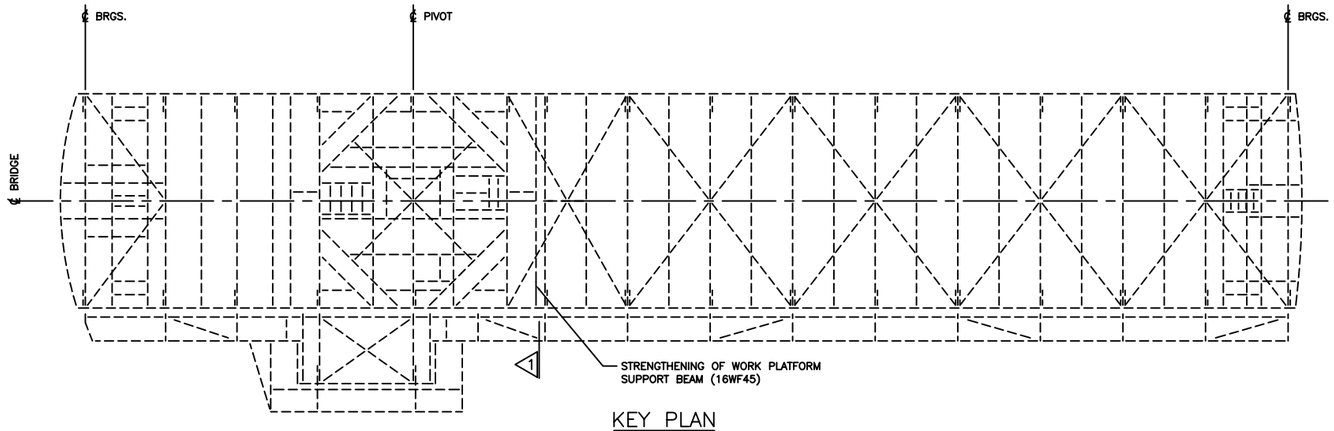

KEY PLAN
1/8" = 1'-0"

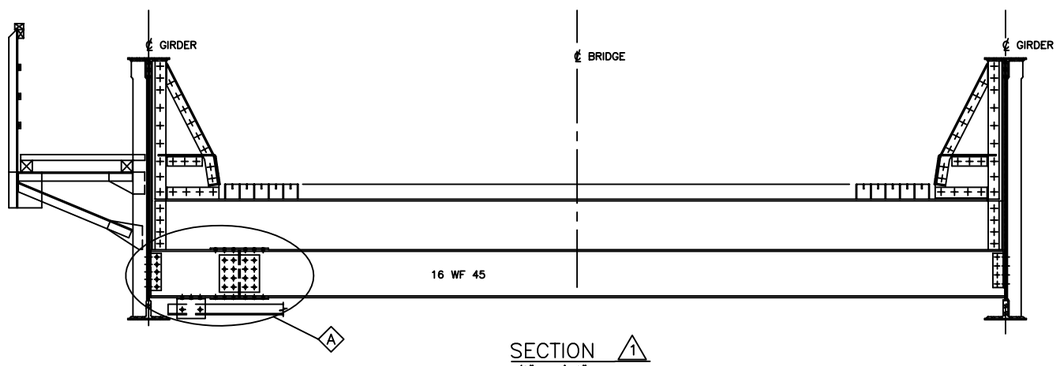

SECTION 1
1/2" = 1'-0"

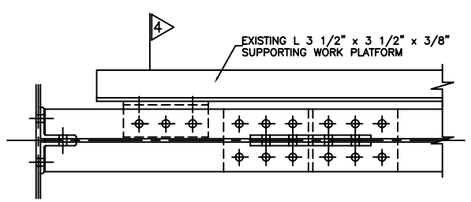

SECTION 2
1 1/2" = 1'-0"

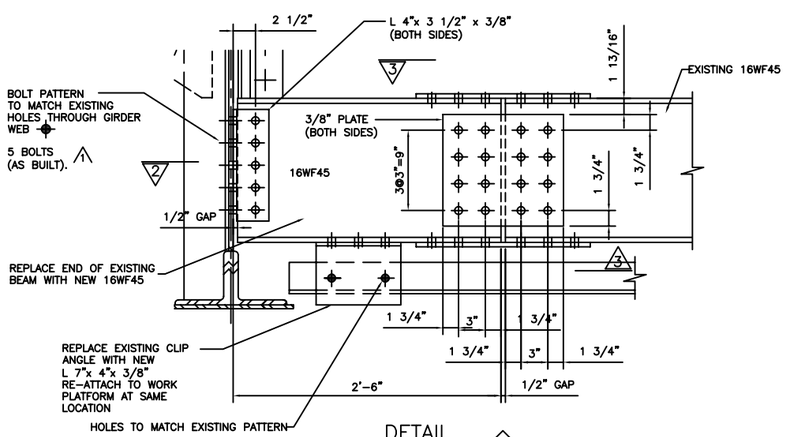

DETAIL A
1 1/2" = 1'-0"

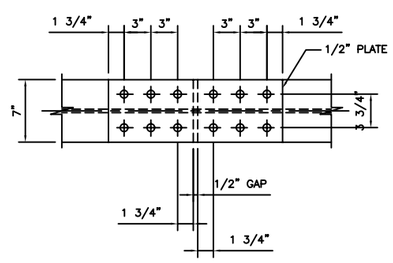

SECTION 3
1 1/2" = 1'-0"

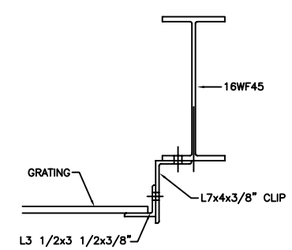

SECTION 4
1 1/2" = 1'-0"

LEGEND

- INDICATES LOCATION OF NEW HOLE REQUIRED IN EXISTING AND/OR NEW STEEL. COMPONENTS TO BE FASTENED WITH NEW BOLT.
- INDICATES LOCATION OF EXISTING RIVET OR BOLT TO BE REMOVED AND REPLACED WITH NEW BOLT THROUGH EXISTING STEEL AND NEW CONNECTION STEEL
- INDICATES LOCATION OF EXISTING RIVET OR BOLT TO REMAIN IN PLACE. (SHOWN FOR INFORMATION PURPOSES ONLY)

THE MINISTRY OF WORKS AND ENGINEERING

P.O. Box HM525 Hamilton HMCX Bermuda
Phone: (441)295-5151

DELCAN INTERNATIONAL
Toronto Canada

GENERAL NOTES:
1. FOR GENERAL NOTES SEE DRAWING NO. S1.
2. DIMENSIONS TO BE CONFIRMED IN THE FIELD BY THE CONTRACTOR.

ISSUED FOR: CONSTRUCTION

AMENDMENTS:

NO:	REVISION	APP	DATE:
	AS-BUILT	J.C.	06/03/2001
0	ISSUE FOR CONSTRUCTION		31/03/2000

SCALE: AS SHOWN

SURVEY
PREPARED BY: N/A DATE:

DESIGN
PREPARED BY: B.I.A. DATE: 31/01/2000
CHECKED BY: J.P.S. DATE: 31/01/2000

DRAWING
PREPARED BY: A.B.M. DATE: 31/01/2000
CHECKED BY: B.I.A. DATE: 31/01/2000

APPROVED BY:

PROJECT NUMBER: 44/21/02

PROJECT NAME:
LONGBIRD BRIDGE REHABILITATION

DRAWING FILE NO: S11.DWG ACAD R-14

SHEET TITLE:
MISCELLANEOUS STRUCTURAL REPAIRS-2

SHEET NUMBER: S11 REVISION 1

LICENSED PROFESSIONAL ENGINEER B.I. ARCHIBALD PROVINCE OF ONTARIO

LICENSED PROFESSIONAL ENGINEER J.P. STEPHENSON PROVINCE OF ONTARIO

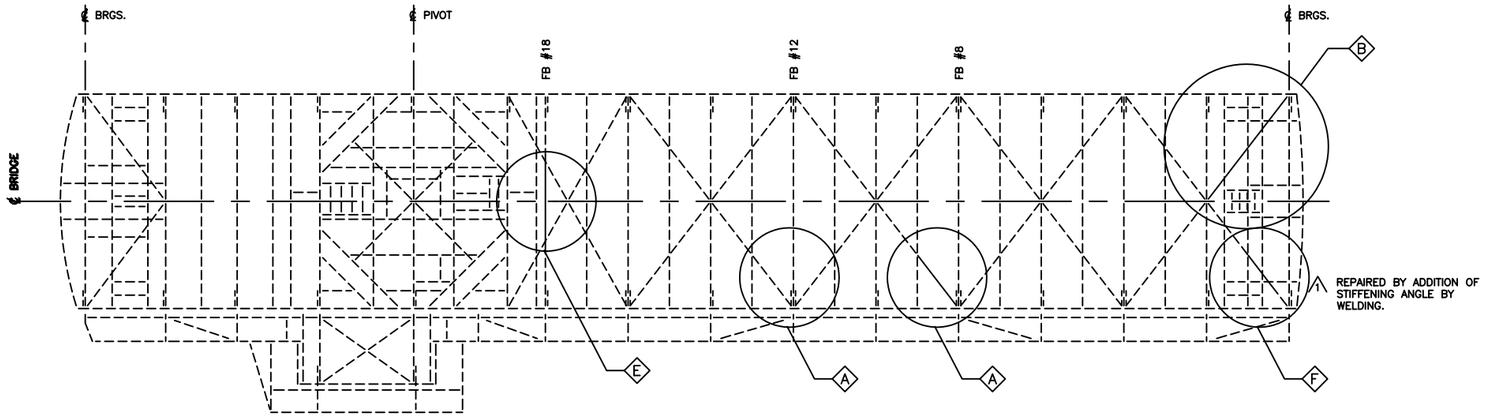

KEY PLAN
1/8" = 1'-0"

NOTES:
1. REPAIRS TO BRACING TO BE DONE DURING PERIODS WHEN WIND SPEEDS ARE NOT EXPECTED TO EXCEED 30MPH.

LEGEND

- INDICATES LOCATION OF NEW HOLE REQUIRED IN EXISTING AND/OR NEW STEEL. COMPONENTS TO BE FASTENED WITH NEW BOLT.
- INDICATES LOCATION OF EXISTING RIVET OR BOLT TO BE REMOVED AND REPLACED WITH NEW BOLT THROUGH EXISTING STEEL AND NEW CONNECTION STEEL
- INDICATES LOCATION OF EXISTING RIVET OR BOLT TO REMAIN IN PLACE. (SHOWN FOR INFORMATION PURPOSES ONLY)

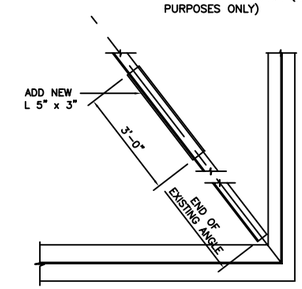

1 DETAIL 'F'
1/2" = 1'-0"

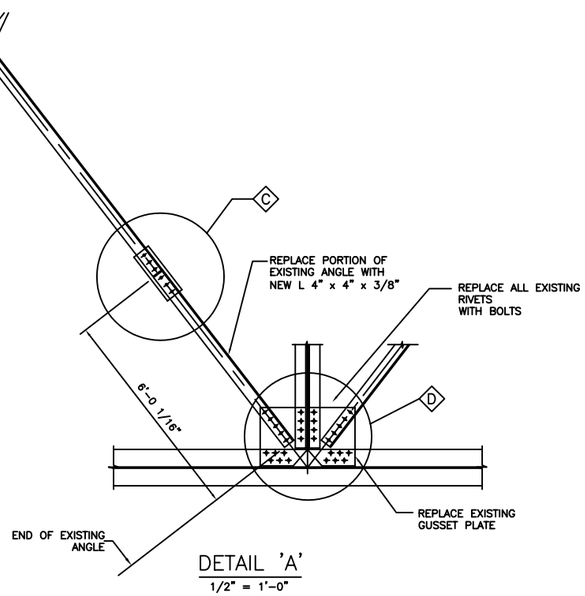

DETAIL 'A'
1/2" = 1'-0"

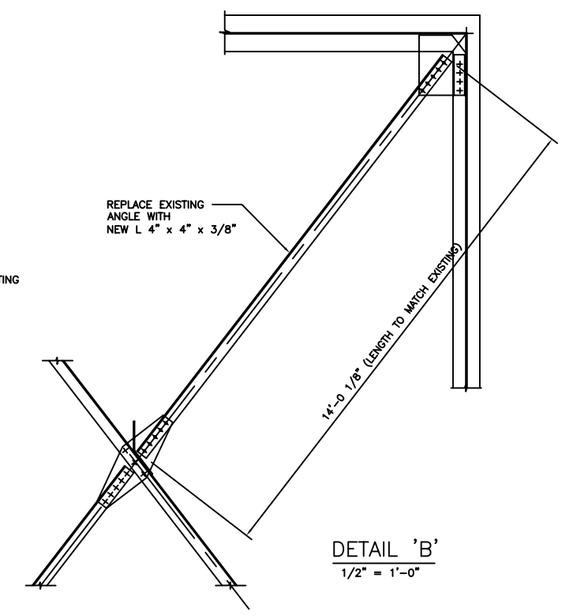

DETAIL 'B'
1/2" = 1'-0"

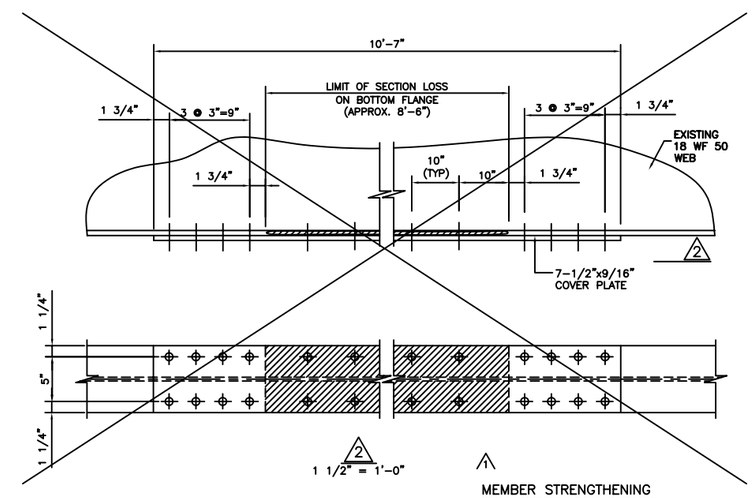

DETAIL 'E'

LOCAL STRENGTHENING
BOTTOM FLANGE
1 1/2" = 1'-0"

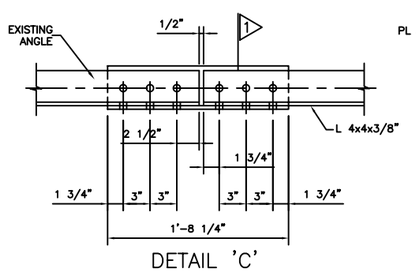

DETAIL 'C'
1 1/2" = 1'-0"

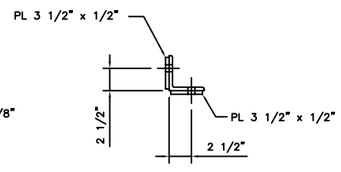

1
1 1/2" = 1'-0"

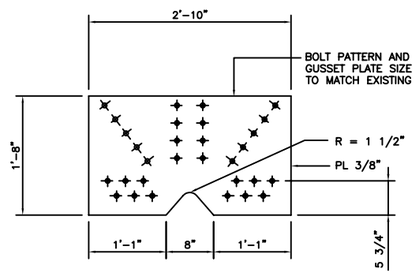

DETAIL 'D'
1" = 1'-0"

LICENSED PROFESSIONAL ENGINEER
B.I. ARCHIBALD
PROVINCE OF ONTARIO

LICENSED PROFESSIONAL ENGINEER
J.P. STEPHENSON
PROVINCE OF ONTARIO

THE MINISTRY OF WORKS AND ENGINEERING

P.O. Box HM525 Hamilton HMCX Bermuda
Phone: (441)295-5151

DELCAN INTERNATIONAL
Toronto Canada

GENERAL NOTES:
1. FOR GENERAL NOTES SEE DRAWING NO. S1.
2. DIMENSIONS TO BE CONFIRMED IN THE FIELD BY THE CONTRACTOR.

ISSUED FOR: CONSTRUCTION

AMENDMENTS:

NO:	REVISION	APP	DATE:
1	AS-BUILT	J.C.	06/03/2001
0	ISSUE FOR CONSTRUCTION		31/03/2000

SCALE: AS SHOWN

SURVEY
PREPARED BY: N/A DATE:

DESIGN
PREPARED BY: B.I.A. DATE: 31/01/2000
CHECKED BY: J.P.S. DATE: 31/01/2000

DRAWING
PREPARED BY: A.B.M. DATE: 31/01/2000
CHECKED BY: B.I.A. DATE: 31/01/2000

APPROVED BY:

PROJECT NUMBER: 44/21/02

PROJECT NAME:
LONGBIRD BRIDGE REHABILITATION

DRAWING FILE NO: S10.DWG ACAD R-14

SHEET TITLE:
MISCELLANEOUS STRUCTURAL REPAIRS -1

SHEET NUMBER: S10 REVISION 1

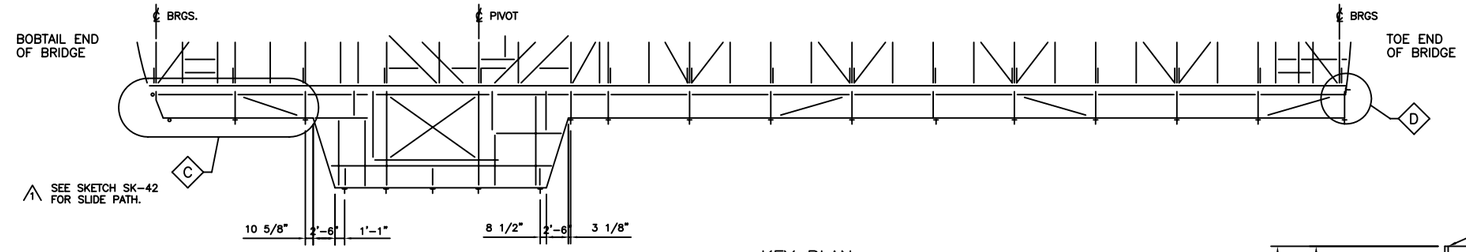

KEY PLAN
1/8"=1'-0"

LEGEND

- INDICATES LOCATION OF NEW HOLE REQUIRED IN EXISTING AND/OR NEW STEEL. COMPONENTS TO BE FASTENED WITH NEW BOLT.
- INDICATES LOCATION OF EXISTING RIVET OR BOLT TO BE REMOVED AND REPLACED WITH NEW BOLT THROUGH EXISTING STEEL AND NEW CONNECTION STEEL
- INDICATES LOCATION OF EXISTING RIVET OR BOLT TO REMAIN IN PLACE. (SHOWN FOR INFORMATION PURPOSES ONLY)

NOTES:

1. ALL RAILS TO BE CAPPED WITH 3/8" PLATES, SIZED AS REQUIRED, & WELDED ALL AROUND. EDGES TO BE GROUND SMOOTH.
2. THIS DRAWING TO READ IN CONJUNCTION WITH DWGS. S6, S7 AND S8.
3. SEE DWG. S6 FOR ADDITIONAL NOTES.

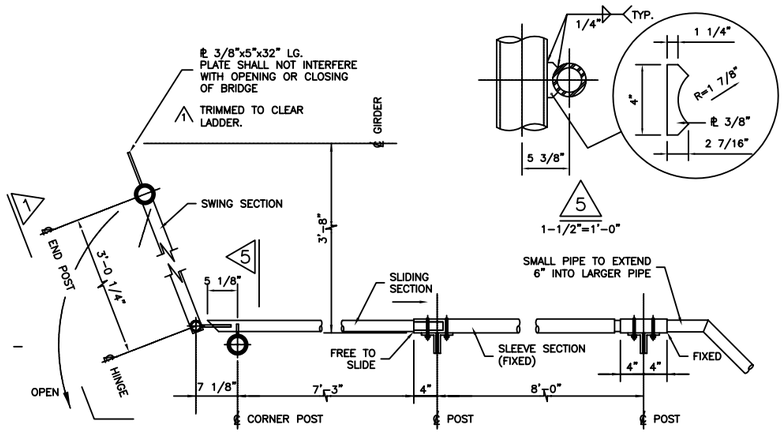

C PLAN – BOBTAIL END (POSTS AND RAILS SHOWN ONLY)
1"=1'-0"

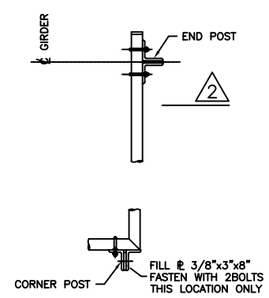

D PLAN – TOE END (POSTS AND RAILS SHOWN ONLY)
1"=1'-0"

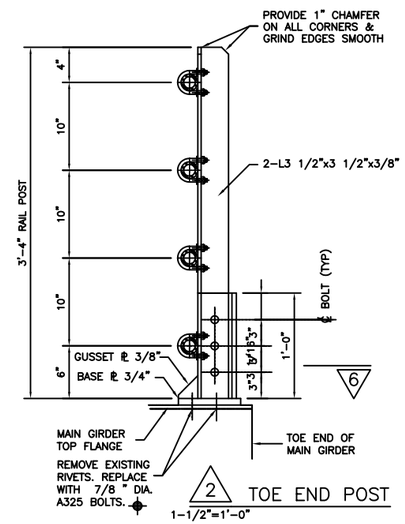

2 TOE END POST
1-1/2"=1'-0"

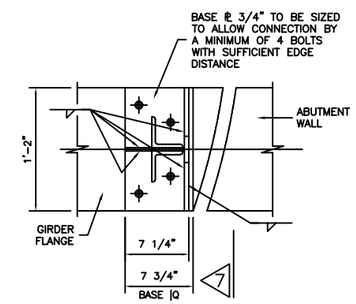

6 TOE END POST BASE
1-1/2"=1'-0"

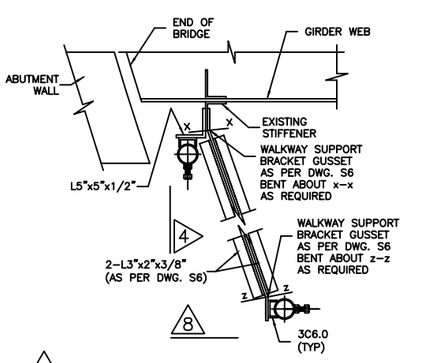

3 END WALKWAY SUPPORT BRACKET
1"=1'-0"
(WALKWAY DECKING & SUPPORT ANGLES NOT SHOWN FOR CLARITY)

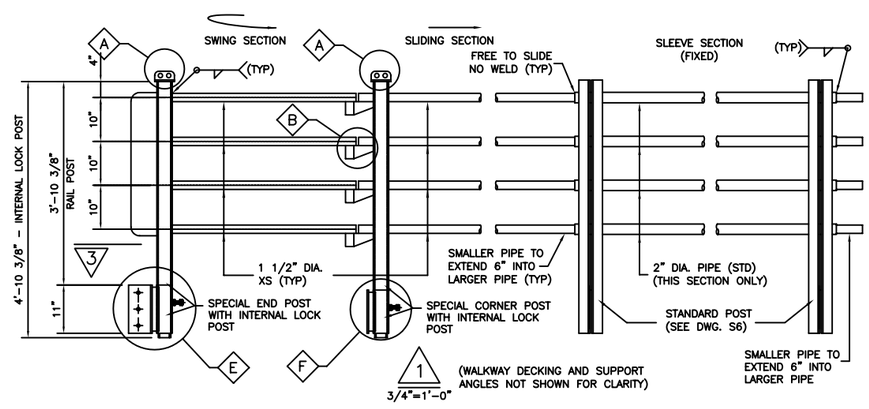

1 (WALKWAY DECKING AND SUPPORT ANGLES NOT SHOWN FOR CLARITY)
3/4"=1'-0"

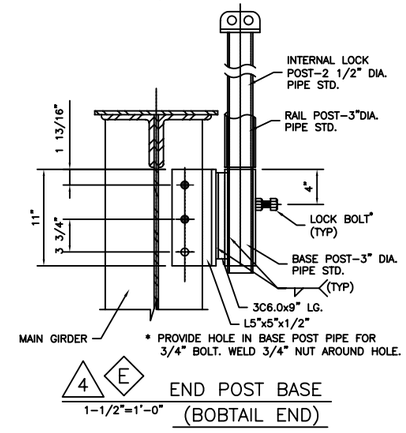

4 E END POST BASE (BOBTAIL END)
1-1/2"=1'-0"

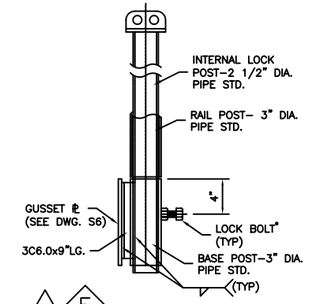

8 F CORNER POST BASE (BOBTAIL END)
1-1/2"=1'-0"

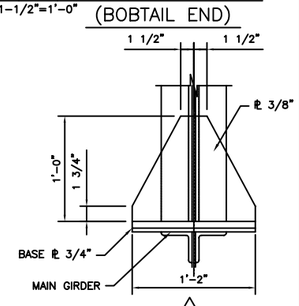

7
1-1/2"=1'-0"

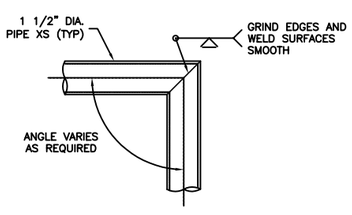

WALKWAY RAIL CORNER DETAIL
1-1/2"=1'-0"

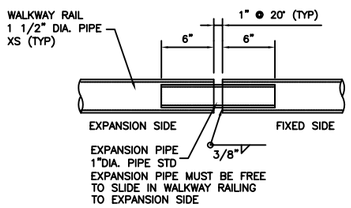

WALKWAY RAIL JOINT DETAIL
1-1/2"=1'-0"
(ONE ONLY PERMITTED PER RAIL)

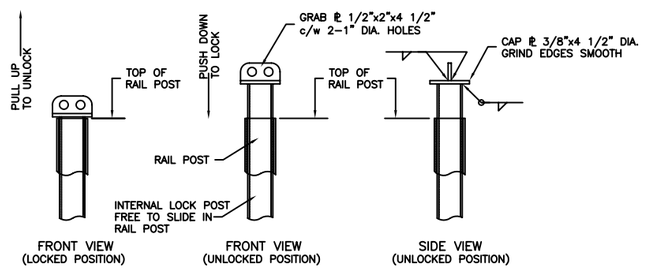

A LOCK POST
1-1/2"=1'-0"

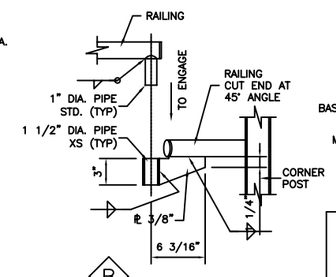

B SWING HINGE
1-1/2"=1'-0"

LICENSED PROFESSIONAL ENGINEER B.I. ARCHIBALD PROVINCE OF ONTARIO

LICENSED PROFESSIONAL ENGINEER J.P. STEPHENSON PROVINCE OF ONTARIO

THE MINISTRY OF WORKS AND ENGINEERING

P.O. Box HM525 Hamilton HMCX Bermuda
Phone: (441)295-5151

DELCAN INTERNATIONAL
Toronto Canada

GENERAL NOTES:

ISSUED FOR: CONSTRUCTION

AMENDMENTS:

NO:	REVISION	APP	DATE:
2	AS-BUILT	J.C.	06/03/2001
1	SLIDE PATH PER SK-42	J.C.	07/02/2001
0	ISSUE FOR CONSTRUCTION		31/03/2000

SCALE: AS SHOWN

SURVEY
PREPARED BY: n/a DATE:

DESIGN
PREPARED BY: B.I.A. DATE: 31/01/2000
CHECKED BY: J.P.S DATE: 31/01/2000

DRAWING
PREPARED BY: K.R.S. DATE: 31/01/2000
CHECKED BY: B.I.A. DATE: 31/01/2000

APPROVED BY:

PROJECT NUMBER: 44/21/02

PROJECT NAME:
LONGBIRD BRIDGE REHABILITATION

DRAWING FILE NO: S9.DWG ACAD R-14

SHEET TITLE:
WALKWAY & CONTROL HOUSE RAILING

SHEET NUMBER: S9 REVISION 2

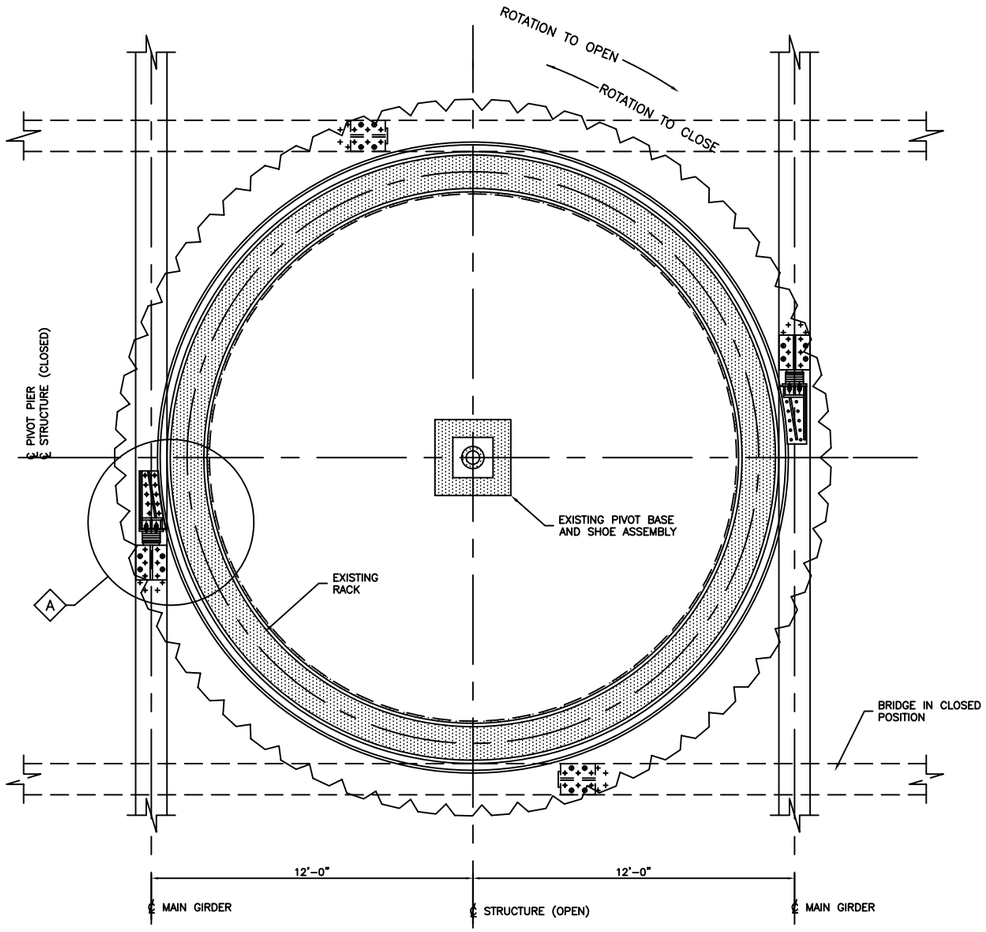

PLAN (BRIDGE FULLY OPEN)
3/8"=1'-0"

LEGEND

- INDICATES LOCATION OF NEW HOLE REQUIRED IN EXISTING AND/OR NEW STEEL. COMPONENTS TO BE FASTENED WITH NEW BOLT.
- INDICATES LOCATION OF EXISTING RIVET OR BOLT TO BE REMOVED AND REPLACED WITH NEW BOLT THROUGH EXISTING STEEL AND NEW CONNECTION STEEL.
- INDICATES LOCATION OF EXISTING RIVET OR BOLT TO REMAIN IN PLACE. (SHOWN FOR INFORMATION PURPOSES ONLY)

NOTES:

1. ALL RADII GIVEN ARE TO CENTRE OF PIVOT PIER AND STRUCTURE.
2. ALL 5/16" DIA. BOLTS SHALL BE STAINLESS STEEL HEXAGON SOCKET FLAT COUNTERSUNK BOLTS.
3. PIER BRACKETS TO BE INSTALLED FIRST ON PIER AS SHOWN.

   GIRDER BRACKET TO BE INSTALLED ON GIRDER AFTER ALL HYDRAULIC EQUIPMENT (AND ASSOCIATED ATTACHMENTS) AT PIVOT PIER IS INSTALLED.

   GIRDER BRACKET (AND FABREEKA ASSEMBLY) SHALL BE INSTALLED AND ADJUSTED SUCH THAT WHEN THE FABREEKA ASSEMBLY IS FULLY COMPRESSED, THERE REMAINS A MIN. OF 3/4" OF EXPANSION TRAVEL ON THE HYDRAULIC CYLINDERS.
4. THE CONTRACTOR MAY WISH TO PARTIALLY OPEN BRIDGE TO FACILITATE DRILLING OF ANCHOR BOLTS.

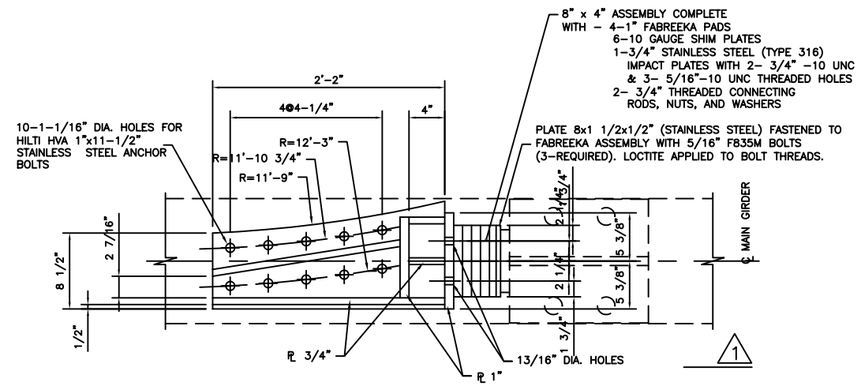

PLAN (PIER BRACKET)
1 1/2"=1'-0"

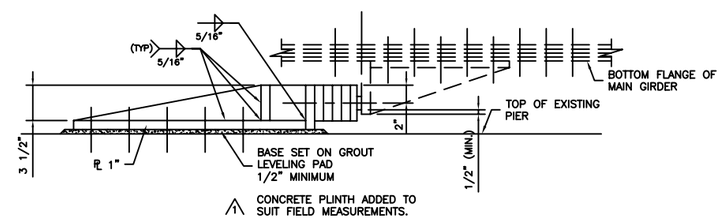

1 1/2"=1'-0"

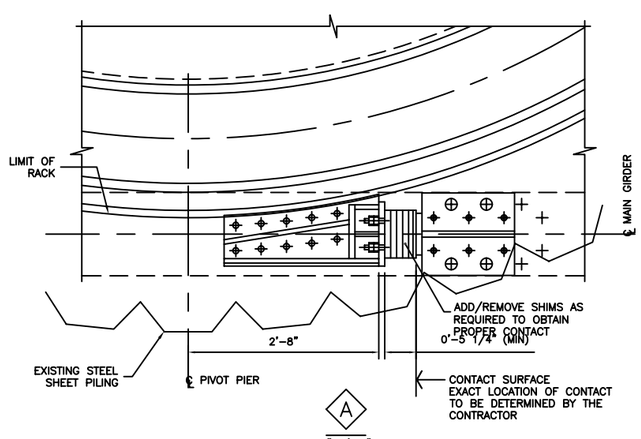

1"=1'-0"
(2 REQUIRED)

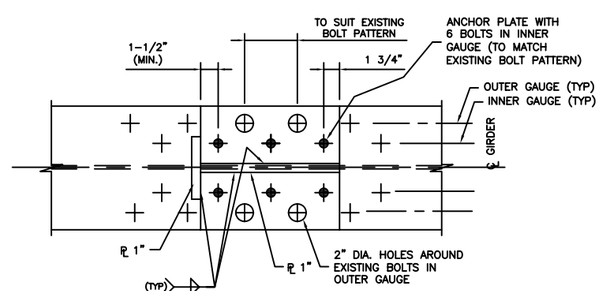

PLAN (GIRDER BRACKET)
1–1/2":1'-0"

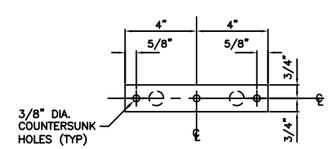

STAINLESS STEEL PLATE
3" = 1'-0"

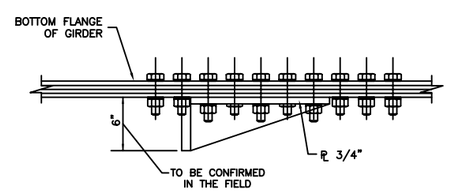

2
1–1/2"=1'-0"

THE MINISTRY OF WORKS AND ENGINEERING

P.O. Box HM525 Hamilton HMCX Bermuda
Phone: (441)295–5151

DELCAN INTERNATIONAL
Toronto Canada

GENERAL NOTES:
1. FOR GENERAL NOTES SEE DRAWING NO. S1.
2. DIMENSIONS TO BE CONFIRMED IN THE FIELD BY THE CONTRACTOR.

ISSUED FOR: CONSTRUCTION

AMENDMENTS:

NO:	REVISION	APP	DATE:
1	AS–BUILT	J.C.	06/03/2001
0	ISSUE FOR CONSTRUCTION		31/03/2000

SCALE: AS SHOWN

SURVEY
PREPARED BY: N/A DATE:

DESIGN
PREPARED BY: B.I.A. DATE: 31/01/2000
CHECKED BY: J.P.S DATE: 31/01/2000

DRAWING
PREPARED BY: K.R.S. DATE: 31/01/2000
CHECKED BY: B.I.A. DATE: 31/01/2000

APPROVED BY:

PROJECT NUMBER: 44/21/02

PROJECT NAME:
LONGBIRD BRIDGE REHABILITATION

DRAWING FILE NO: S19.DWG ACAD R–14

SHEET TITLE:
POSITIVE STOP MECHANISMS

SHEET NUMBER: S19 REVISION 1

LICENSED PROFESSIONAL ENGINEER B.I. ARCHIBALD PROVINCE OF ONTARIO

LICENSED PROFESSIONAL ENGINEER J.P. STEPHENSON PROVINCE OF ONTARIO

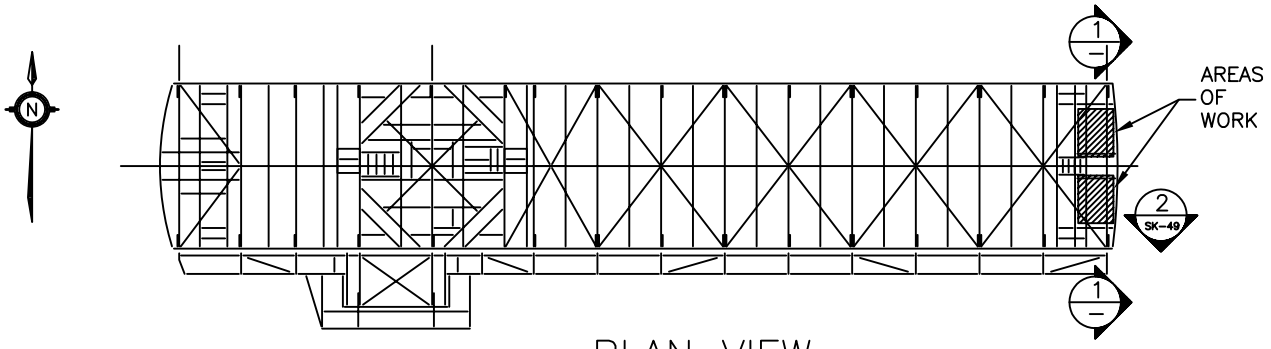

PLAN VIEW

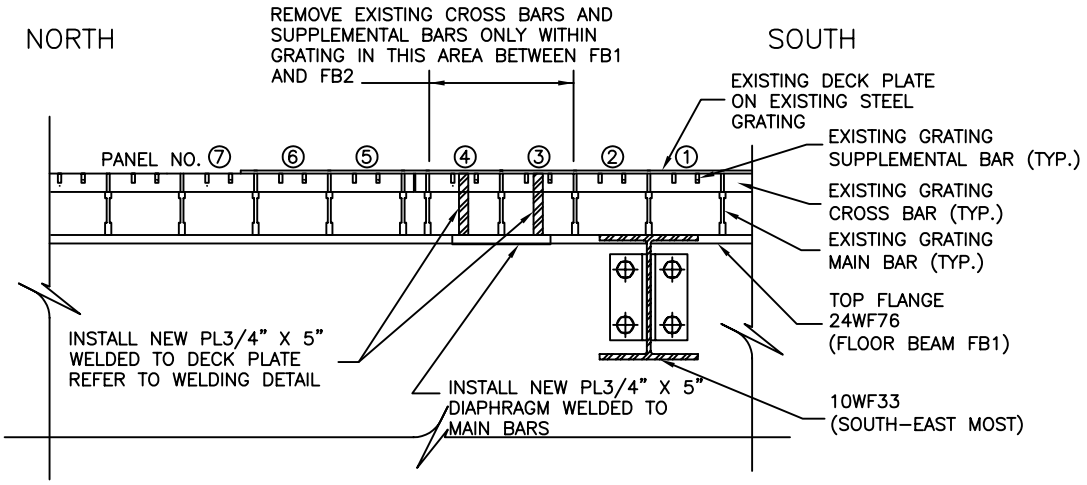

NORTH EAST END 1

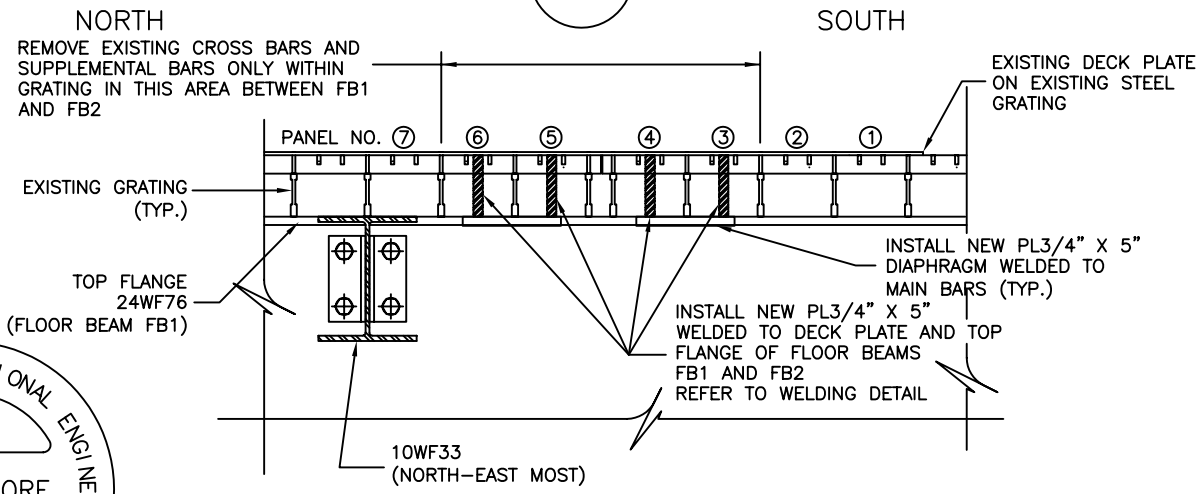

SOUTH EAST END 1

THIS DRAWING TO BE READ IN CONJUNCTION WITH DWG.NO. SK-49

REGISTERED PROFESSIONAL ENGINEER
W. M. MOORE
PROVINCE OF ONTARIO

DELCAN INTERNATIONAL
Toronto Canada

THE MINISTRY OF WORKS AND ENGINEERING

Engineering and Operations Division
P.O. Box HM525 Hamilton HMCX Bermuda
Phone: (441) 295-5151 Fax: (441) 295-0170

TITLE:	DECK GRATING REPAIRS-1	DETAIL#:	SK - 48
PROJECT:	LONGBIRD BRIDGE REHABILITATION	DATE:	FEB 28, 2001
FILE:	44/21/02	REF:	
LOCATION:	DECK GRATING, EAST END	DRAWN BY:	AFN

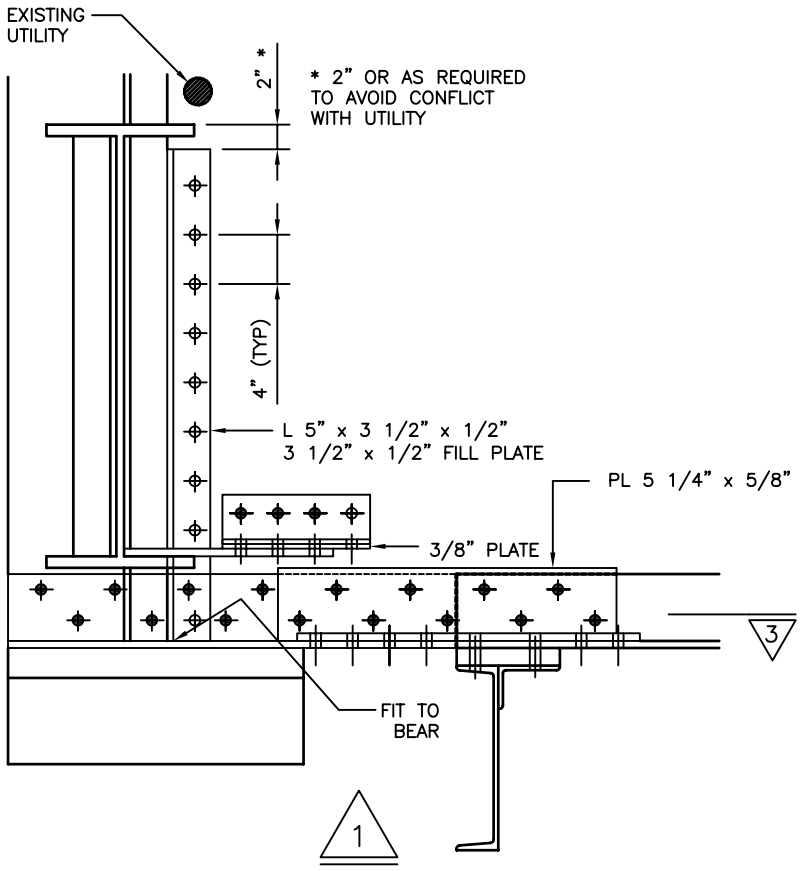

LEGEND

- INDICATES LOCATION OF NEW HOLE REQUIRED IN EXISTING AND/OR NEW STEEL. COMPONENTS TO BE FASTENED WITH NEW BOLT.
- INDICATES LOCATION OF EXISTING RIVET OR BOLT TO BE REMOVED AND REPLACED WITH NEW BOLT THROUGH EXISTING STEEL AND NEW CONNECTION STEEL
- INDICATES LOCATION OF EXISTING RIVET OR BOLT TO REMAIN IN PLACE. (SHOWN FOR INFORMATION PURPOSES ONLY)

NOTES:

STRUCTURAL STEEL SHALL BE IN ACCORDANCE WITH CAN/CSA G40.21–M GRADE 300W.

ALL BOLTS TO BE 7/8" DIA., 15/16" DIA. HOLES

ALL BOLTS TO BE ASTM A325–TYPE 1 HOT DIP GALVANIZED

SKETCH TO BE READ IN CONJUNCTION WITH SK–46

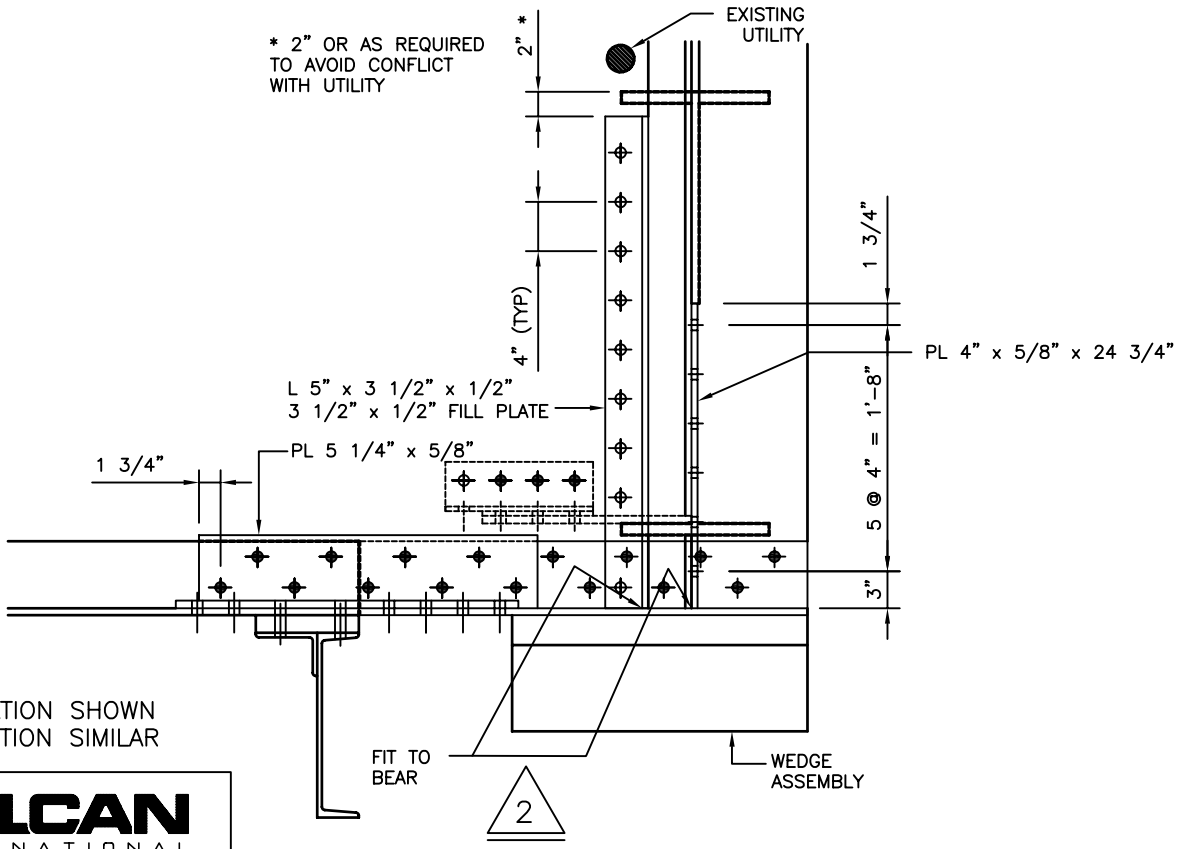

NW LOCATION SHOWN
SW LOCATION SIMILAR

DELCAN INTERNATIONAL
Toronto Canada

THE MINISTRY OF WORKS AND ENGINEERING

Engineering and Operations Division
P.O. Box HM525 Hamilton HMCX Bermuda
Phone: (441) 295-5151 Fax: (441) 295-0170

TITLE:	MAIN GIRDER REPAIRS–2	DETAIL#:	SK – 47
PROJECT:	LONGBIRD BRIDGE REHABILITATION	DATE:	FEB 21, 2001
FILE:	44/21/02	REF:	
LOCATION:	NORTH & SOUTH GIRDERS, WEST END	DRAWN BY:	ABM

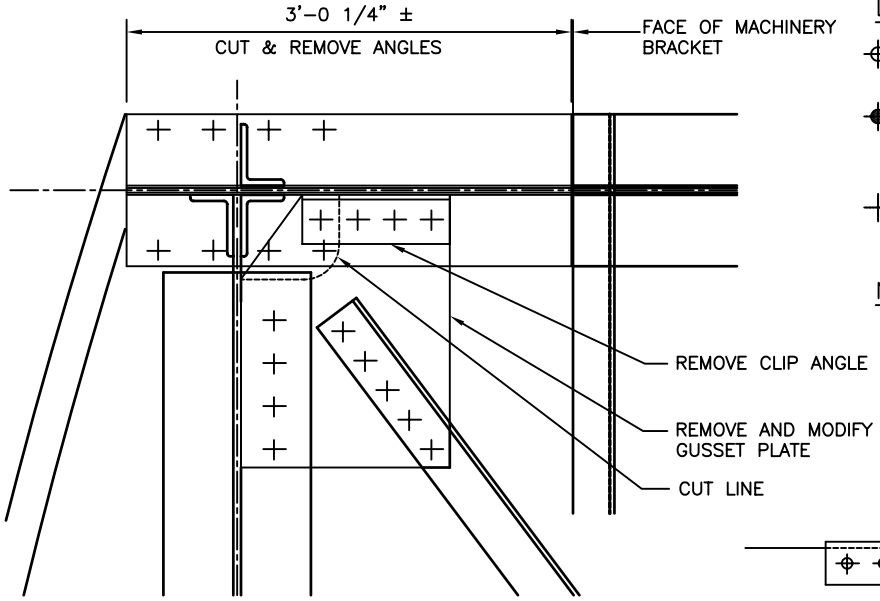

REMOVAL DETAIL

LEGEND

- INDICATES LOCATION OF NEW HOLE REQUIRED IN EXISTING AND/OR NEW STEEL. COMPONENTS TO BE FASTENED WITH NEW BOLT.
- INDICATES LOCATION OF EXISTING RIVET OR BOLT TO BE REMOVED AND REPLACED WITH NEW BOLT THROUGH EXISTING STEEL AND NEW CONNECTION STEEL
- INDICATES LOCATION OF EXISTING RIVET OR BOLT TO REMAIN IN PLACE. (SHOWN FOR INFORMATION PURPOSES ONLY)

NOTES:

STRUCTURAL STEEL SHALL BE IN ACCORDANCE WITH CAN/CSA G40.21-M GRADE 300W.

ALL BOLTS TO BE 7/8" DIA., 15/16" DIA. HOLES

ALL BOLTS TO BE ASTM A325-TYPE 1 HOT DIP GALVANIZED

SKETCH TO BE READ IN CONJUNCTION WITH SK-47

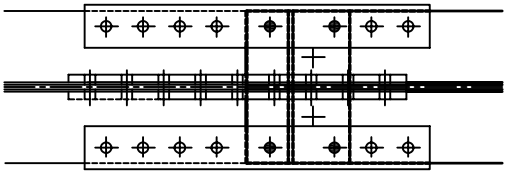

3

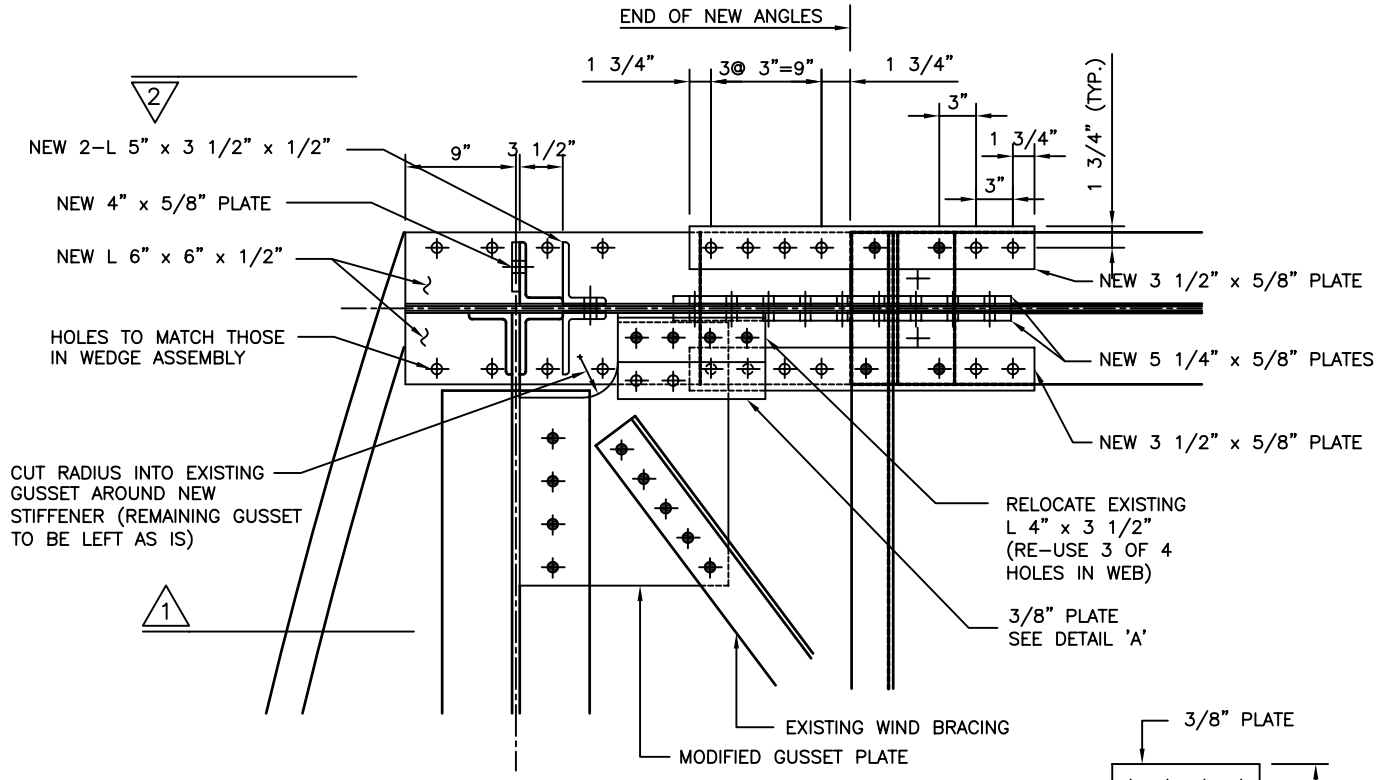

NW LOCATION SHOWN
SW LOCATION SIMILAR

NEW

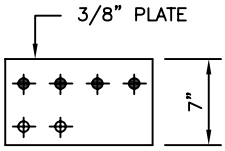

DETAIL 'A'

DELCAN INTERNATIONAL
Toronto Canada

THE MINISTRY OF WORKS AND ENGINEERING

Engineering and Operations Division
P.O. Box HM525 Hamilton HMCX Bermuda
Phone: (441) 295-5151 Fax: (441) 295-0170

TITLE:	MAIN GIRDER REPAIRS-1	DETAIL#:	SK - 46
PROJECT:	LONGBIRD BRIDGE REHABILITATION	DATE:	FEB. 21, 2001
FILE:	44/21/02	REF:	
LOCATION:	NORTH & SOUTH GIRDERS, WEST END	DRAWN BY:	ABM

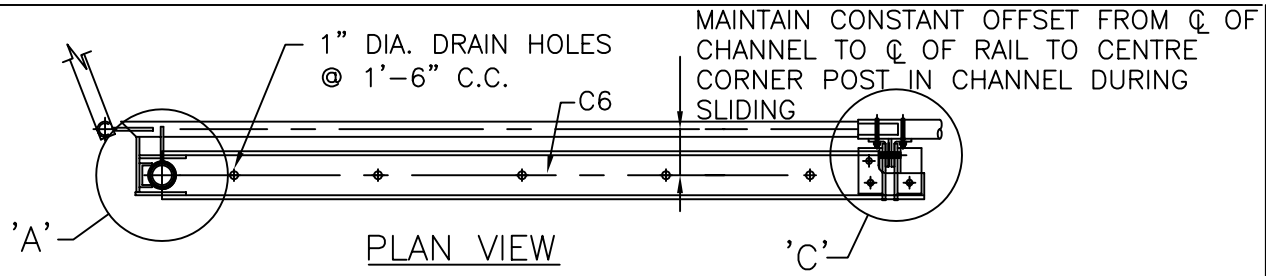

PLAN VIEW

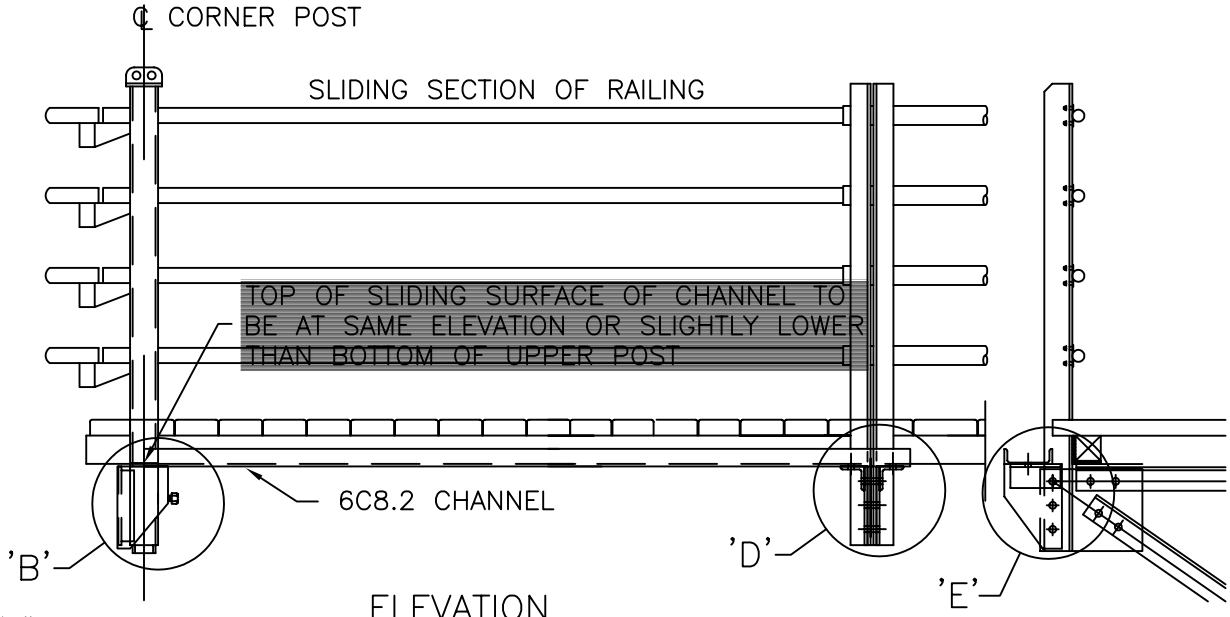

ELEVATION

SECTION

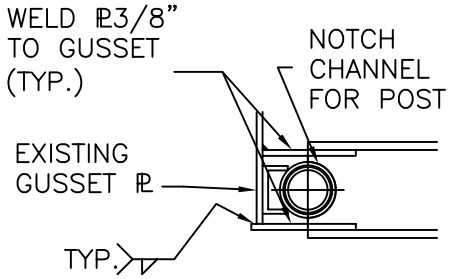

DETAIL 'A'

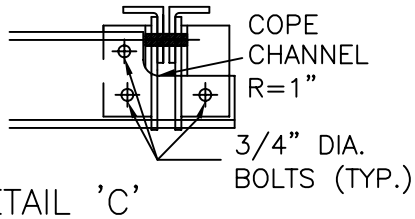

DETAIL 'C'

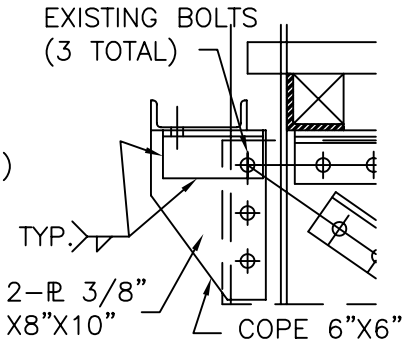

DETAIL 'E'

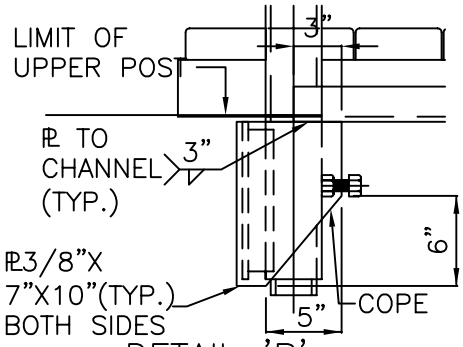

DETAIL 'B'

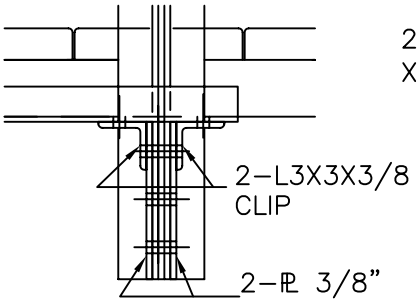

DETAIL 'D'

DELCAN INTERNATIONAL
Toronto Canada

THE MINISTRY OF WORKS AND ENGINEERING

Engineering and Operations Division
P.O. Box HM525 Hamilton HMCX Bermuda
Phone: (441) 295-5151 Fax: (441) 295-0170

TITLE:	SLIDE PATH	DETAIL#:	SK - 42
PROJECT:	LONGBIRD BRIDGE REHABILITATION	DATE:	FEBRUARY 7, 2001
FILE:	44/21/02	REF:	S6, S9
LOCATION:	WALKWAY RAILING	DRAWN BY:	AFN

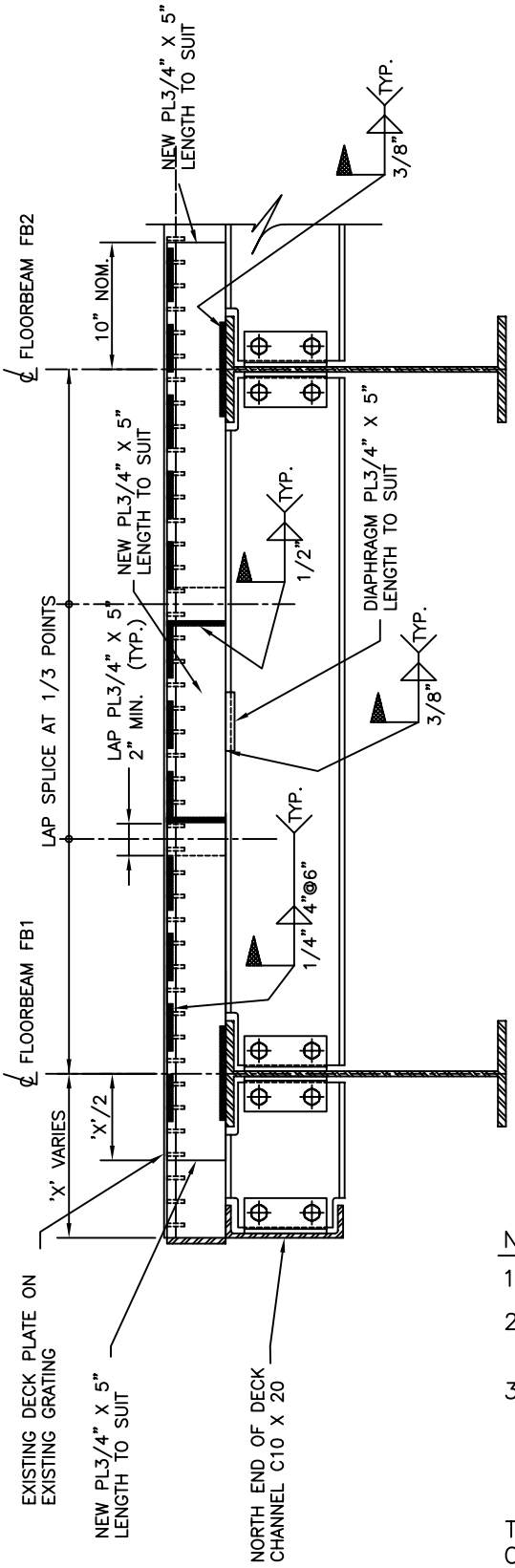

SECTION 2 / SK-48

SHOWING NEW GRATING MAIN BAR DETAILS

NOTES:

1. STEEL GRADE 300W
2. WELDING AS SPECIFIED IN THE CONTRACT DOCUMENTS
3. FINISH TO BE GALVANISED

THIS DRAWING TO BE READ IN CONJUNCTION WITH DWG.NO. SK-48

REGISTERED PROFESSIONAL ENGINEER
W. M. MOORE
PROVINCE OF ONTARIO

DELCAN INTERNATIONAL
Toronto Canada

THE MINISTRY OF WORKS AND ENGINEERING

Engineering and Operations Division
P.O. Box HM525 Hamilton HMCX Bermuda
Phone: (441) 295-5151 Fax: (441) 295-0170

TITLE:	DECK GRATING REPAIRS-2	DETAIL#:	SK - 49
PROJECT:	LONGBIRD BRIDGE REHABILITATION	DATE:	FEB 28, 2001
FILE:	44/21/02	REF:	
LOCATION:	DECK GRATING, EAST END	DRAWN BY:	AFN